KATO®

FASTENING SYSTEMS, INC.

THE ORIGINAL INVENTOR & MANUFACTURER OF THE BI-DIRECTIONAL TANGLESS® SCREW THREAD INSERT

MORE TANGLESS SIZES & MORE TOOLING OPTIONS THAN ANY OTHER COMPANY!

KATO Fastening Systems, Inc. (KATO) has been manufacturing and globally supplying CoilThread inserts since the early 1970's. In the mid 1980's KATO revolutionized the helical coil screw thread insert market with the introduction of CoilThread II: Tangless® inserts. Tangless CoilThread inserts and tools were so unique they were awarded dozens of patents worldwide.

Over the years KATO has expanded and broadened Tangless Products to include a wide range of unified and metric thread sizes (more than any other company). KATO Tangless Tools are the highest quality installation and removal tools in the industry, and KATO offers more tooling options (manual, electric and pneumatic) than any other company. For example, the KATO Prewinder Electric tool is the fastest semi-automatic installation system for CoilThread inserts (Tangless or tanged) on the market.

CoilThread System

STI Taps, STI Gages, CoilThread inserts, and CoilThread Tools; KATO provides everything you need to get the job done!

Quality

KATO maintains a Quality Management System in compliance with AS9100.

KFS-30 with the KATO Prewinder Electric tool page 59.

Don't settle for anything less than the original… KATO Tangless Inserts!

KATO has established a network of global manufacturing and distribution facilities. The KATO global manufacturing network provides customers access to a wide range of products and capabilities; high performance hinges and specialty engineered components. KATO has the know-how, flexibility, and innovation to meet your changing needs.

© 2026 KATO Fastening Systems, Inc. All Rights Reserved. KATO®, Tangless®, CoilThread®, Perma-Coil®, Pro-Kits®, LockOne®, and all KATO Products are trademarks of KATO Fastening Systems, Inc. and/or ADVANEX Inc., Heli-Coil® is a registered trademark of Stanley Black & Decker.

Rev: 03/2026

Table of Contents

04 CoilThread Inserts
06 - Design & Features
08 - Insert Selection
09 - MA/MS/NAS Specs
10 - Screw Locking Inserts

12 Installation
14 - Unified Drilling Dim.
15 - Unified Tapped Hole Dim.
16 - Metric Drilling Dim.
17 - Metric Tapped Hole Dim.

18 Insert Materials
18 - Platings & Coatings
19 - Insert P/N System
20 - Insert Dimensions
22 - P/N & Cross References

41 STI Taps
42 - Dimensions
44 - Part Numbers
47 - Cross References

51 STI Gages
52 - Dimensions
53 - Part Numbers
54 - Cross References

56 Tooling Section
56 - Part Number System

57 Installation Pawl
58 - Dimensions
58 - Part Numbers
58 - Cross References

59 KFS-30
60 - Dimensions
62 - Prewinder Part Numbers
63 - Hex Part Numbers

64 KFS-20
65 - Dimensions
67 - Prewinder Part Numbers
68 - Hex Part Numbers

69 KFS-25
70 - Dimensions
71 - Part Numbers

72 Prewinder Air
73 - Dimensions
76 - Part Numbers
77 - Cross References

78 Linear Torque Arm
79 - Part Numbers
80 - Articulating Torque Arm
81 - Articulating Part Numbers

82 Round Shaft Tools
83 - Dimensions
84 - Part Numbers
85 - Cross References

86 Prewinder Hand
87 - Dimensions
89 - Part Numbers
90 - Cross References

91 Removal Tools
92 - Dimensions
93 - Part Numbers
94 - Cross References

95 Tang Break-Off
96 - Dimensions
97 - Part Numbers
98 - Cross References

99 Pro-Kits
100 - Part Numbers

101 Perma-Coil Kits
102 - Perma-Coil Kits
103 - Master Kits

104 LockOne
105 - Master Kits
106 - Dimensions
106 - Part Numbers

CoilThread Inserts

CoilThread Inserts (Tangless or tanged) are economical, helically-coiled fastening devices providing permanent, wear-resistant screw threads which exceed the strength of most parent materials. CoilThread inserts are made of cold-rolled stainless steel wire (AS7245), work-hardened to a tensile strength above 200,000 psi, and a hardness of Rc 43-50. The finished surface (32 microinches) is exceedingly smooth, virtually eliminating friction-induced thread erosion.

CoilThread Inserts provide design and manufacturing flexibility.

Why use KATO CoilThread inserts?

KATO CoilThread inserts protect tapped threads against failures due to stripping, seizing, corrosion and wear. They save time and money because of their low initial cost and permit flexibility of installation when using KATO tools detailed in the tooling section of this catalog (page 56).

CoilThread inserts have the smallest required boss diameter of any internal threaded insert of the same nominal thread size. The diamond shaped helically coiled wire design allows the inserts to engage the threads in the parent material and at the same time accept a male fastener. Consequently, they do not need a thick wall structure to support the internal threads.

The resilient characteristics of each coil in a CoilThread insert allows it to adjust independently to secure the maximum surface contact with individual threads in the parent material. As a result, loads are distributed more evenly than solid threads. Stress and fatigue concentrations are reduced to maximize thread strength and increase the reliability and life of the fastening system.

When installed into STI tapped holes (per NASM33537 for unified; MA1567 for metric), CoilThread inserts provide a finished thread meeting the requirement of FED-STD-H28.

Assembled CoilThread inserts will also accommodate UNJ (MIL-S-7742 and AS8879) male threaded fasteners.

Boss Diameter (Wall Thickness) Requirements

Tangless vs Tanged

KATO Tangless CoilThread inserts are identical in form, fit, and function to the conventional tanged inserts. In fact, Tangless CoilThread inserts are identical to tanged inserts in every way except for their method of installation and removal, and they have the exact same procurement specification (NASM8846 for unified sizes and MA1565 for metric sizes).

Tangless CoilThread

- FOD-Free Design: No tangs to break off, retrieve or lose.
- Approved for use on military programs by NASM8846, NAS1130, and NA0276.
- Cost Reduction: Significantly decreases installation and inspection time (savings of $0.15-$0.50 per hole based on customer studies).
- Bi-Directional design eliminates insert orientation requirements.
- Quick, non-destructive removal prevents damage to the parent material and the insert.

CoilThread

- Lower pricing than competitive inserts.
- Complete range of unified and metric sizes, locking and non-locking, bulk and strip-feed.
- Meets or exceeds all applicable military, aerospace, and commercial standards.

Design & Features

The stainless steel used in CoilThread inserts resists corrosion under normal environmental conditions. Galvanic action within the thread assembly is reduced, further adding to the life of the fastening assembly. CoilThread inserts can be used within temperatures from -320° F to +800° F.

Drive Notch:
Used to drive the insert into the tapped hole.

Tang:
Used to drive the insert into tapped hole. Remove after installation (recommended).

Preformed Notch:
Simplifies removal of tang.

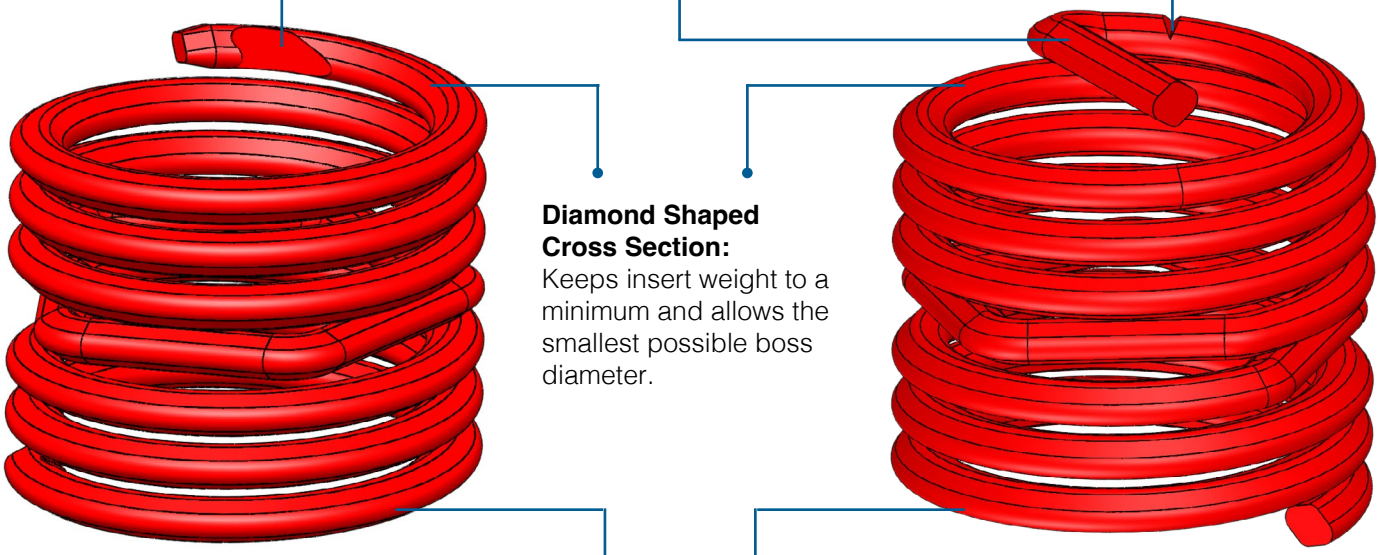

Diamond Shaped Cross Section:
Keeps insert weight to a minimum and allows the smallest possible boss diameter.

Tangless CoilThread

CoilThread

Wear-Resistant Threads:
Work-hardened, stainless steel forms a smooth, hard surface that reduces thread wear and resists corrosion. Result: A highly reliable, long-life insert.

CoilThread Inserts Provide Design and Manufacturing Flexibility:

Design opportunities are provided by the structure of these inserts. Because of the continuous helically-coiled design, they don't need a thick wall structure to support the internal and external threads: the diamond-shaped coil is the thread! The insert can be installed in reduced-size bosses, or flanges, and within constricted areas, thus saving space and weight while providing high strength. A boss radius equal to the nominal bolt diameter is usually sufficient (see page 12).

KATO
Strip-feed reels

KATO CoilThread tools provide a choice of installation methods best suited to specific production techniques. Convenient hand tools can be supplied for small runs, repairs, and prototyping. High-speed electric or air-powered tools may be selected for rapid, low-cost installation.

CoilThread inserts are available in Bulk and on Strip-Feed Reels, providing flexibility for any production setup.

High Tension Anchor:

The high tensile coils of CoilThread inserts undergo a diameter reduction during installation. The outward spring-like force of the coils “locks” the insert into place. Each coil can flex independently to contact the greatest amount of parent material thread surface. Both static and dynamic load bearing capabilities are improved.

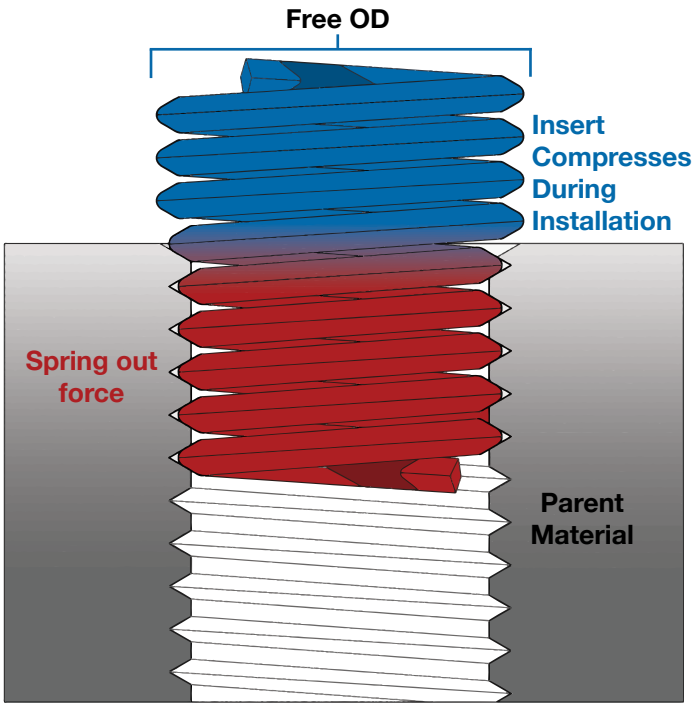

Corrosion Protection:

Corrosion is the deterioration of metal due to a reaction with its environment. The products of corrosion vary widely from flaky red rust of iron to the relatively benign oxide over aluminum. In general, corrosion should be avoided or minimized where possible.

There are many types of corrosion, but a particular type called galvanic corrosion is very important for inserts and fasteners to avoid. Galvanic corrosion occurs when dissimilar metals are in contact in the presence of an electrolytic solution. All metals exhibit different degrees of “activity,” or “nobility,” and can be arranged in a galvanic series of increasing activity. Gold and platinum are the most noble while zinc and magnesium are the most active. The most common electrolytic solution encountered is ordinary water. Seawater, or salt spray, is more damaging because of high concentrations of dissolved salts.

The best way to prevent galvanic corrosion is to use similar potential metals and eliminate the electrolyte conductor. Standard CoilThread inserts are non-passivated stainless steel. This minimizes the possibility of galvanic corrosion occurring when they are installed in aluminum or magnesium parent materials.

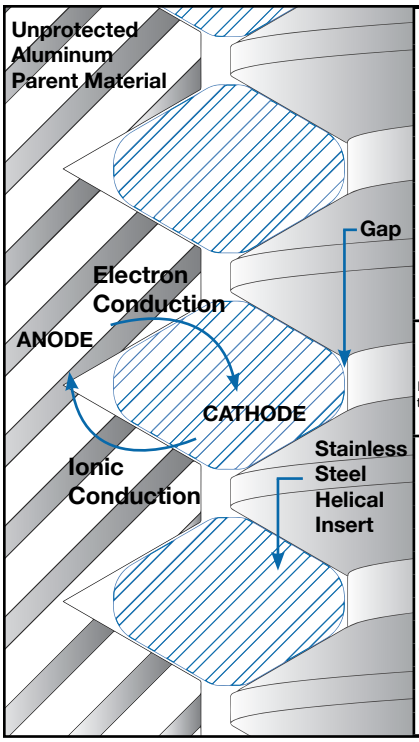

	Metal or Alloy
ANODE + Least Noble	Magnesium
	Magnesium Alloy
	Zinc
	Aluminum 1100
	Cadmium
	Aluminum 2024-T4
	Steel or Iron
	Chromium Iron (Active)
	Ni-Resist
	Type 304-Stainless (Active)
	Type 316- Stainless (Active)
	Hastelloy C
Electric Current flows from Positive (+) to Negative (-)	Lead, Tin Solders
	Lead, Tin
	Nickel (Active)
	Inconel
	Hastelloy B
CATHODE - Most Noble	Brasses, Copper, Bronze
	Copper-Nickel Alloys
	Monel
	Silver Solder
	Nickel (Passive)
	Inconel (Passive)
	Chromium-Iron (Passive)
	Type 304 Stainless (Passive)
	Type 316 Stainless (Passive)
	Silver
	Titanium
	Graphite, Gold
	Platinum

Some additional precautions for reducing galvanic corrosion are:

1. Isolate the fasteners from the electrolyte. This can be done through gasketing or sealing.
2. Specify a dry film lubricant such as molybdenum disulfide on the inserts. This provides a secondary barrier against corrosion.
3. Specify cadmium plated inserts. The cadmium plating provides a sacrificial barrier against corrosion. In addition, the cadmium plating has lubricating properties which minimize galling when stainless steel screws are used.
4. Apply corrosion inhibiting pastes, or compounds, to the screw. These include zinc chromate primer (TT-P-1757) and strontium chromate primer (MIL-PRF-23377). Please Note: Pastes applied to helically coiled screw thread inserts can become trapped between the wire and the tapped hole, and cause loss of proper tolerance. It is therefore recommended to apply the paste only to the screw, or bolt, not the insert. If zinc chromate primer is applied to the tapped hole it should be thinned and applied sparingly. The insert should be installed while the primer is still wet.
5. Where practical, or where it will not interfere with the completed assembly, the external joint should be coated with a suitable paint.

Insert Selection

KATO CoilThread inserts are available in five nominal lengths (1D, 1.5D, 2D, 2.5D, & 3D). The nominal length is a calculated value and cannot be measured in the free state; it is the actual installed length plus 1/2 a pitch. The nominal length is a multiple of the thread size, or of the insert nominal diameter (D).

It is important to select the correct insert length in order to balance the bolt tensile strength against the shear strength of the parent material. The five insert lengths are shown in the table below.

Select the insert length which will produce a thread system strong enough to fracture the bolt before it will strip or damage either the parent material or the insert.

Recommended Nominal Insert Lengths Based on Parent Material Versus Bolt Material Strengths

Unified Sizes

Shear Strength of Parent Material (ksi)	Bolt Material Minimum Ultimate Tensile Strength (ksi)								
	54	75	96	108	125	132	160	180	220
10	2	2.5	3	3	---	---	---	---	---
15	1.5	1.5	2	2.5	2.5	3	3	---	---
20	1	1.5	1.5	2	2	2	2.5	3	3
25	1	1	1.5	1.5	1.5	2	2	2.5	2.5
30	1	1	1	1.5	1.5	1.5	2	2	2.5
40	1	1	1	1	1	1.5	1.5	1.5	2
50	1	1	1	1	1	1	1	1.5	1.5

Example: If the parent material shear strength is 10 ksi and the bolt tensile strength is 54 ksi, the correct insert nominal length is 2D (2 diameters).

Metric Sizes

Shear Strength of Parent Material (MPa)	Bolt Material Minimum Ultimate Tensile Strength (MPa)							
	300	400	500	600	800	1000	1200	1400
70	1.5	2	2.5	2.5	---	---	---	---
100	1	1.5	1.5	2	2.5	3	---	---
150	1	1	1.5	1.5	2	2	2.5	3
200	1	1	1	1	1.5	1.5	2	2.5
250	1	1	1	1	1	1.5	1.5	2
300	1	1	1	1	1	1.5	1.5	1.5
350	1	1	1	1	1	1	1.5	1.5

Example: If the parent material shear strength is 70 MPa and the bolt strength is 300 MPa, the correct insert nominal length is 1.5D (1-1/2 diameters).

Standard, readily available bolts and screws that require no special hardware are used with CoilThread inserts. The bolt must engage the entire length of the insert to achieve maximum assembly strength. To ensure against partial engagement, KATO strongly recommends the tang always be removed. This will also guarantee that the locking coil(s) will be engaged by the full threads of the bolt (when screw locking inserts are used). If design parameters prevent the tang from being removed, KATO recommends using Tangless CoilThread inserts.

Notes:

1. Bolt tensile strengths are specified minimums. When choosing an insert length, consideration should be given to the maximum tensile strength allowed by the bolt drawing or procurement specification.
2. Service temperatures can cause significant variations in strength values; therefore, compensation should be allowed.
3. The importance of shear values should be kept in mind because the parent material is subject to shearing stresses near the major diameter of the tapped STI threads.
4. When the strength values fall between two values in the table above, use the next lower material shear value, or the next higher bolt tensile strength value.
5. To achieve maximum strength, bolt length and thread length as well as full tapped thread depth must be sufficient to assure full thread engagement over the entire length of the insert.

Bolt Projection

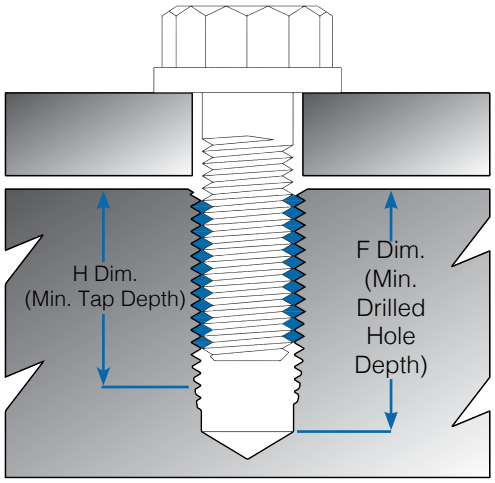

Military, Aerospace & Commercial Standards

KATO CoilThread (Tangless and tanged) inserts are precision engineered and have been put through rigorous torque, tension, and vibration tests as well as comprehensive dimensional inspections and metallurgical analysis in attaining their MIL-Spec qualifications. CoilThread inserts have been thoroughly tested by an independent testing laboratory and are certified to conform to NASM8846.

In addition, CoilThread inserts and tools are in conformance with the following military, aerospace, and commercial standards and specifications:

Unified Thread Sizes

Standards & Specification	Title/Description
A-A-59158	Tools For Inserting and Extracting Helical Coil Wire Screw Thread Inserts
AS7245	Insert, Screw Thread, Helical Coil, CRES, Procurement Specification
AS7246	Insert, Screw Thread, Helical Coil, Corrosion and Heat Resistant Alloy (Inconel), Procurement Spec.
NAS1130	Insert, Screw Thread, Helical Coil, Tangless
NASM122076-122275	Insert, Screw Thread, Helical Coil, Free Running, Coarse Thread
NASM124651-124850	Insert, Screw Thread, Helical Coil, Free Running, Fine Thread
NASM21209	Insert, Screw Thread, Helical Coil, Self-Locking, Coarse and Fine Thread
NASM33537	Insert, Screw Thread, Helical Coil, Inch Series, Coarse and Fine Thread, Standard Assembly Dims.
NASM8846	Insert, Screw Thread, Helical Coil, Unified Series, Procurement Specification

Metric Thread Sizes

Standards & Specification	Title/Description
NA0276	Insert, Screw Thread, Helical Coil, Free Running and Self-Locking, Metric, Tangless
MA1565	Insert, Screw Thread, Helical Coil, Metric Series, Procurement Specification
MA1567	Insert, Screw Thread, Helical Coil, Metric Series, Standard Assembly Dims.
MA3279	Insert, Screw Thread, Helical Coil, Free Running, Metric Series, Uncoated
MA3280	Insert, Screw Thread, Helical Coil, Free Running, Metric Series, Dry Film Lubricated
MA3281	Insert, Screw Thread, Helical Coil, Free Running, Metric Series, Cadmium Plated
MA3329	Insert, Screw Thread, Helical Coil, Self-Locking, Metric Series, Uncoated
MA3330	Insert, Screw Thread, Helical Coil, Self-Locking, Metric Series, Dry Film Lubricated
MA3331	Insert, Screw Thread, Helical Coil, Self-Locking, Metric Series, Cadmium Plated

Platings/Coatings

Standards & Specification	Title/Description
AMS-QQ-P-416	Plating, Cadmium (Electrodeposited)
AMS2410	Plating, Silver, Nickel Strike, High Bake
AMS2411	Plating, Silver for High Temperature Applications
AMS2412	Plating, Silver, Copper Strike, Low Bake
AMS-C-26074	Plating, Electroless Nickel
AMS2700	Passivation of CRES
AS5272	Lubricant, Solid Film, Heat Cured, Corrosion Inhibiting, Procurement Specification

CoilThread Screw Locking Inserts

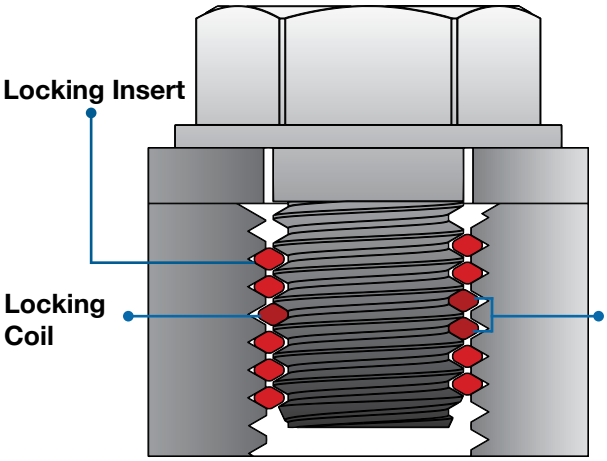

Locking Inserts eliminate the need for external fastener locking components.

VS.

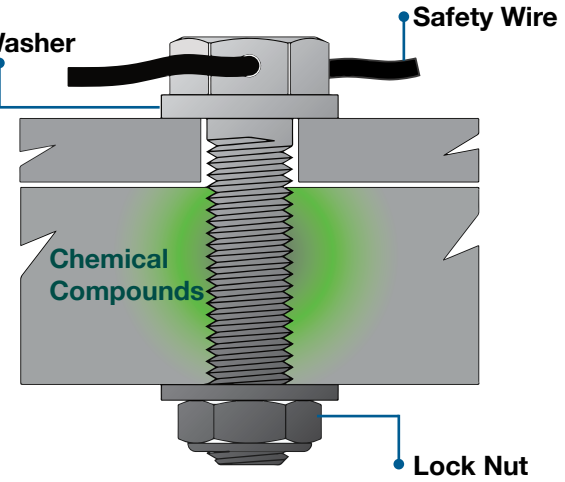

KATO screw locking inserts exert a prevailing torque on male threaded fasteners to prevent loosening due to vibration or impact. Locking inserts eliminate the need for costly and less desirable locking mechanisms. They are excellent in adjusting screw applications by preventing the male fastener from creeping.

How Locking Inserts Work:

One, or more, of the coils in the insert have a series of straight segments. Upon entry of the bolt these straight segments are flexed outwardly, creating pressure on the bolt. This pressure is applied between the flanks of the bolt thread so that contact area is maximized and unit pressure is minimized. It is often possible to realize cycle life far in excess of specification requirements (15 cycles).

Location of Locking Coils:

- **For Tanged inserts 1, 1.5, and 2 diameter lengths**: The center of the locking coil(s) equals 1/2 the number of free coils.
- **For Tanged inserts 2.5 and 3 diameter lengths:** The locking coil is located the same distance from the tang as 2 diameter length inserts.
- **For Tangless inserts the center of the locking coil equals 1/2 the number of free coils.**

Locking Torques:

Locking inserts conform to NAS1130 (unified Tangless), NA0276 (metric Tangless), NASM21209 (unified tanged), MA3329 (metric tanged), and produce locking torques in accordance with NASM8846 (unified) and MA1565 (metric) when used with heat treated cadmium-plated bolts. When using unplated heat treated or stainless steel bolts, an anti-seize compound, e.g. molybdenum disulfide, must be used in order to minimize galling and assure maximum cycle life. Wear life of the male fastener can also be improved by specifying dry film lubricant or cadmium plating. The use of 300 series stainless steel bolts should be avoided when using locking inserts. Use A286 aircraft quality screws or equivalent (Rc 36-43).

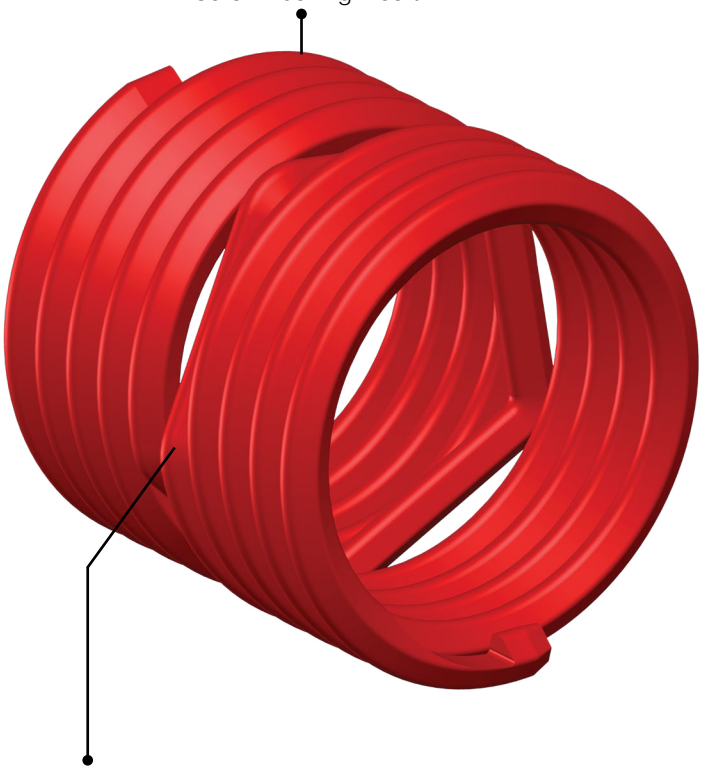

Locking coil segments exert prevailing torque between the thread flanks of the screw, or bolt, to resist loosening.

CoilThread Screw Locking Inserts

Thread Size	Maximum Locking Torque	Minimum Breakaway Torque
Unified Coarse		
1 (.073)-64	15 ozf-in	2 ozf-in
2 (.086)-56	20 ozf-in	3 ozf-in
3 (.099)-48	32 ozf-in	7 ozf-in
4 (.112)-40	48 ozf-in	10 ozf-in
5 (.125)-40	75 ozf-in	13 ozf-in
6 (.138)-32	6 lbf-in	1 lbf-in
8 (.164)-32	9 lbf-in	1.5 lbf-in
10 (.190)-24	13 lbf-in	2 lbf-in
12 (.216)-24[1]	24 lbf-in	3 lbf-in
1/4 (.250)-20	30 lbf-in	4.5 lbf-in
5/16 (.3125)-18	60 lbf-in	7.5 lbf-in
3/8 (.3750)-16	80 lbf-in	12 lbf-in
7/16 (.4375)-14	100 lbf-in	16.5 lbf-in
1/2 (.5000)-13	150 lbf-in	24 lbf-in
9/16 (.5625)-12	200 lbf-in	30 lbf-in
5/8 (.6250)-11	300 lbf-in	40 lbf-in
3/4 (.7500)-10	400 lbf-in	60 lbf-in
7/8 (.8750)-9	600 lbf-in	82 lbf-in
1 (1.0000)-8	800 lbf-in	110 lbf-in
1-1/8 (1.1250)-7	900 lbf-in	137 lbf-in
1-1/4 (1.2500)-7	1000 lbf-in	165 lbf-in
1-3/8 (1.3750)-6	1150 lbf-in	185 lbf-in
1-1/2 (1.5000)-6	1350 lbf-in	210 lbf-in
Unified Fine		
0 (.060)-80[4]	---	---
3 (.099)-56	32 ozf-in	7 ozf-in
4 (.112)-48	48 ozf-in	10 ozf-in
6 (.138)-40	6 lbf-in	1 lbf-in
8 (.164)-36	9 lbf-in	1.5 lbf-in
10 (.190)-32	13 lbf-in	2 lbf-in
1/4 (.250)-28	30 lbf-in	3.5 lbf-in
5/16 (.3125)-24	60 lbf-in	6.5 lbf-in
3/8 (.3750)-24	80 lbf-in	9.5 lbf-in
7/16 (.4375)-20	100 lbf-in	14 lbf-in
1/2 (.5000)-20	150 lbf-in	18 lbf-in
9/16 (.5625)-18	200 lbf-in	24 lbf-in
5/8 (.6250)-18	300 lbf-in	32 lbf-in
3/4 (.7500)-16	400 lbf-in	50 lbf-in
7/8 (.8750)-14	600 lbf-in	70 lbf-in
1 (1.0000)-12	800 lbf-in	90 lbf-in
1-1/8 (1.1250)-12	900 lbf-in	117 lbf-in
1-1/4 (1.2500)-12	1000 lbf-in	143 lbf-in
1-3/8 (1.3750)-12	1150 lbf-in	165 lbf-in
1-1/2 (1.5000)-12	1350 lbf-in	190 lbf-in

Thread Size	Maximum Locking Torque	Minimum Breakaway Torque
Metric Coarse		
M2X0.4	0.12 N.m	0.003 N.m
M2.2X0.45	0.14 N.m	0.02 N.m
M2.5X0.45	0.22 N.m	0.06 N.m
M3X0.5	0.44 N.m	0.1 N.m
M3.5X0.6	0.68 N.m	0.12 N.m
M4X0.7	0.9 N.m	0.16 N.m
M5X0.8	1.6 N.m	0.3 N.m
M6X1	3 N.m	0.4 N.m
M7X1	4.4 N.m	0.6 N.m
M8X1.25	6 N.m	0.8 N.m
M10X1.5	10 N.m	1.4 N.m
M12X1.75	15 N.m	2.2 N.m
M14X2	23 N.m	3 N.m
M16X2	32 N.m	4.2 N.m
M18X2.5	42 N.m	5.5 N.m
M20X2.5	54 N.m	7 N.m
M22X2.5	70 N.m	9 N.m
M24X3	80 N.m	11 N.m
M27X3	95 N.m	12 N.m
Metric Fine		
M8X1	6 N.m	0.8 N.m
M10X1	10 N.m	1.4 N.m
M10X1.25	10 N.m	1.4 N.m
M12X1.25	15 N.m	2.2 N.m
M12X1.5	15 N.m	2.2 N.m
M14X1.5	23 N.m	3 N.m
M16X1.5	32 N.m	4.2 N.m
M18X1.5	42 N.m	5.5 N.m
M20X1.5	54 N.m	7 N.m
M22X1.5	70 N.m	9 N.m
M18X2	42 N.m	5.5 N.m
M20X2	54 N.m	7 N.m
M22X2	70 N.m	9 N.m
M24X2	80 N.m	11 N.m
M27X2	95 N.m	12 N.m
M30X2	110 N.m	14 N.m
M33X2	125 N.m	16 N.m
M36X2	140 N.m	18 N.m
M39X2	150 N.m	20 N.m
M36X3	140 N.m	18 N.m
M39X3	150 N.m	20 N.m

1. 12-24 is not specified in the NASM8846.
2. Unified Locking CoilThread inserts (Tangless and tanged) produce locking torques in accordance with NASM8846 when installed into 3B STI threads, and tested with heat treated cadmium-plated bolts.
3. Metric Locking CoilThread inserts (Tangless and tanged) produce locking torques in accordance with MA1565 when installed into 4H STI threads, and tested with heat treated cadmium-plated bolts.
4. Check with KATO for availability.

To Convert From	To	Multiply by
N.m	ozf-in	141.6119
N.m	lbf-in	8.850748
ozf-in	N.m	0.0070615
lbf-in	N.m	0.1129848

Installation Procedure

CoilThread inserts are designed to be installed into pre-cut STI (ScrewThread Insert) threads. The installed insert will provide a finished thread meeting the requirements of FED-STD-H28. Example: An 8-32 insert installed into an 8-32 STI 3B thread will create a standard 8-32 UNC 3B thread profile.

A proper STI thread is paramount to creating a precise finished thread profile. KATO recommends the following procedure to ensure the best installation and function of a CoilThread insert.

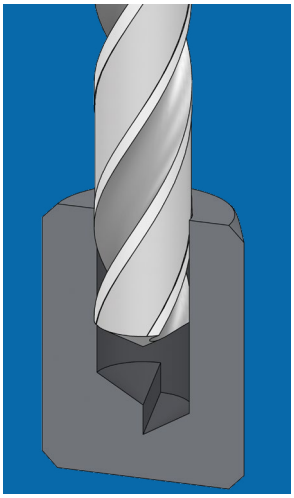

Drill: (step 1)

Drilled hole dimensions are tabulated on pages 14-17.
The minor diameters tabulated conform to NASM33537 and MA1567, and must be met after tapping, and after any supplemental treatment (anodize, chem-film, etc.)

The drill sizes shown are recommendations only, based on expected material behavior for increased tap life in harder materials. Actual individual conditions may require varied drill sizes in order to produce the correct minor diameter after tapping. For example, compensation must be made in tolerances for plating.

The minimum drilled hole depth is designed to allow for:

1. The use of standard countersink as tabulated on pages 14-17.
2. The use of a standard STI plug or bottoming tap for maximum tool life.
3. The use of standard installation set-down of 3/4 to 1-1/2 pitch below the work surface.

The “F” dimension minimum (pages 14-17) is based on installed insert length, plus set down, plus tap chamfer length, plus chip clearance.

For plug taps with a nominal diameter of 5/16” and M8 or smaller, the “F” dimension minimum allows for a male center on the tap equal in length to the nominal tap diameter divided by 2.

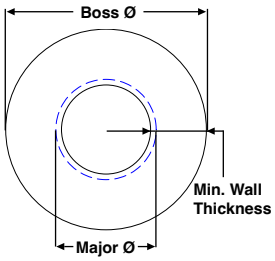

Minimum Material Thickness:

The nominal insert length is the minimum through hole length (material thickness) without counter-sinking and with the insert located 1/4 pitch below the top surface. With normal countersink and set-down, the minimum through hole material thickness equals the “H” dimension (the minimum full thread depth), shown tabulated on pages 14-17.

Boss Diameter:

The recommended boss diameter is two times the STI tap major diameter max. For most materials, a minimum wall thickness equal to the nominal bolt diameter may be used when measured from the centerline of the hole (min boss diameter equals two times nominal thread size).

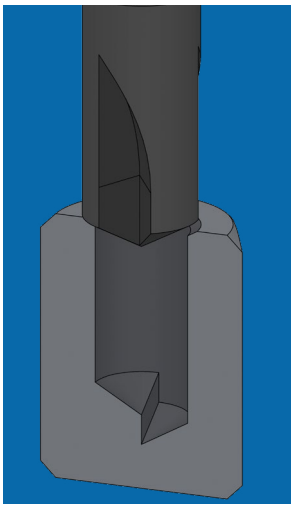

Countersink: (step 2)

Before tapping, it is good practice to countersink 120°±5° to “M” diameter (pages 14-17) in order to prevent a feather edge at the start of the hole. The 60° per side countersink angle is used because it is the same as the angle of the tapped thread, insert cross-section, and inserting tool prewinder tip. This combination provides for smooth and rapid production installations.

The “F” and “H” values (pages 14-17) are calculated with a countersink depth of 1/2 pitch.

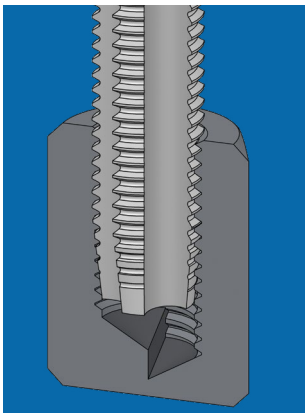

Tap: (step 3)

Tap using CoilThread STI Thread cutting taps (page 41). The pitch diameter limits shown tabulated on pages 15 & 17 conform to NASM33537 and/or MA1567 respectively, and must be met in order to assure proper thread fit after installation of the CoilThread insert.

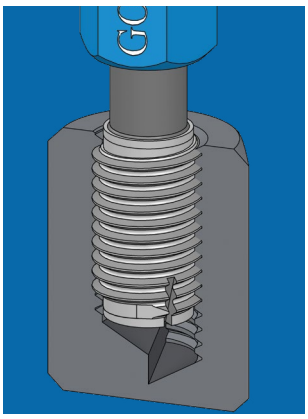

Gage: (step 4)

CoilThread STI Plug Gages (page 51) are used to check the major and pitch diameters of the STI tapped holes. Gaging the tapped hole prior to insert installation is critical to ensure the accuracy of the finished thread. If the tapped hole gages correctly, the installed CoilThread insert will be within the thread tolerance. No further gaging is necessary. If gaging is attempted after the CoilThread is installed the Go thread plug gage may not enter freely; however, the insert will seat itself when the bolt or screw is installed and tightened (reference NASM33537 and MA1567). In fact, it is impossible to gage an installed locking insert.

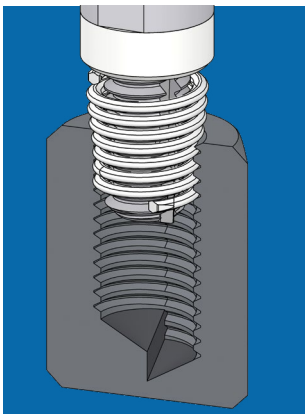

Install: (step 5)

Follow the instructions accompanying the KATO installation tool for proper insert installation. Insert installation depth is dependent on the presence of a countersink (3/4 to 1-1/2 turns below the surface with a countersink and 1/4 to 1/2 turns below the surface without a countersink).

1. **Tangless CoilThread insert installation is now complete.**
2. Tanged inserts require removal and retrieval of the tang, continue to step 2

To eliminate the tang break-off process, and to ensure a FOD-Free assembly consider switching to KATO Tangless CoilThread inserts, there are no tangs to break-off, retrieve or lose!

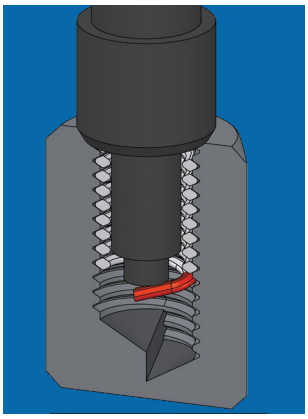

Tang Break-Off: (step 6)

KATO recommends the tang always be removed to ensure that the full threads of the bolt fully engage the locking coils (when using locking inserts). To achieve maximum assembly strength the bolt must engage the entire insert length. Use the KATO Tang Break-off Tool (page 95) to ensure accurate and clean tang break off. In blind holes it may be necessary to remove the broken tang from the bottom of the hole (recommended).

Drilling Dimensions - Unified Sizes

Thread Size	Minor Diameter (After Tapping)			Suggested Drill Size[1]		F Dimension[2] Minimum Drilling Depth for Taps									
						Plug Taps					Bottoming Taps				
	Min All Classes	Max Class 3B	Max Class 2B	Aluminum	Steel	1	1.5	2	2.5	3	1	1.5	2	2.5	3
Unified Coarse															
1 (.073)-64	0.0764	0.0823	0.0823	#47 (.0785)	#46 (.0810)	0.203	0.240	0.276	0.313	0.349	0.136	0.172	0.209	0.245	0.282
2 (.086)-56	0.0899	0.0961	0.0961	3/32 (.0938)	#41 (.0960)	0.236	0.279	0.322	0.365	0.408	0.157	0.200	0.243	0.286	0.329
3 (.099)-48	0.1036	0.1104	0.1104	#36 (.1065)	7/64 (.1094)	0.273	0.323	0.372	0.422	0.471	0.182	0.232	0.281	0.331	0.380
4 (.112)-40	0.1175	0.1252	0.1252	#31 (.1200)	#31 (.1200)	0.318	0.374	0.430	0.486	0.542	0.212	0.268	0.324	0.380	0.436
5 (.125)-40	0.1305	0.1373	0.1373	3.4mm (.1339)	#29 (.1360)	0.338	0.400	0.462	0.525	0.588	0.225	0.288	0.350	0.412	0.475
6 (.138)-32	0.1448	0.1527	0.1527	#26 (.1470)	#25 (.1495)	0.394	0.464	0.532	0.602	0.670	0.263	0.332	0.401	0.470	0.539
8 (.164)-32	0.1708	0.1781	0.1781	#17 (.1730)	#16 (.1770)	0.434	0.516	0.598	0.680	0.762	0.289	0.371	0.453	0.535	0.617
10 (.190)-24	0.1990	0.2080	0.2087	13/64 (.2031)	#5 (.2055)	0.535	0.630	0.725	0.820	0.915	0.357	0.452	0.547	0.642	0.737
12 (.216)-24	0.2250	0.2340	0.2347	#1 (.2280)	#1 (.2280)	0.574	0.682	0.790	0.898	1.006	0.383	0.491	0.599	0.707	0.815
1/4 (.250)-20	0.2608	0.2704	0.2723	H (.2660)	H (.2660)	0.675	0.800	0.925	1.050	1.175	0.450	0.575	0.700	0.825	0.950
5/16 (.3125)-18	0.3245	0.3342	0.3372	Q (.3320)	Q (.3320)	0.801	0.957	1.113	1.269	1.425	0.534	0.690	0.846	1.002	1.158
3/8 (.3750)-16	0.3885	0.3987	0.4026	X (.3970)	X (.3970)	0.750	0.938	1.125	1.312	1.500	0.625	0.812	1.000	1.188	1.375
7/16 (.4375)-14	0.4530	0.4639	0.4688	29/64 (.4531)	29/64 (.4531)	0.867	1.086	1.305	1.524	1.743	0.724	0.943	1.162	1.381	1.600
1/2 (.5000)-13[1]	0.5166	0.5273	0.5335	33/64 (.5156)	17/32 (.5312)	0.962	1.212	1.462	1.712	1.962	0.808	1.058	1.308	1.558	1.808
9/16 (.5625)-12[1]	0.5806	0.5918	0.5986	37/64 (.5781)	19/32 (.5938)	1.062	1.343	1.624	1.905	2.186	0.895	1.176	1.457	1.738	2.019
5/8 (.6250)-11	0.6447	0.6564	0.6641	21/32 (.6562)	21/32 (.6562)	1.170	1.483	1.795	2.108	2.420	0.989	1.301	1.614	1.926	2.239
3/4 (.7500)-10	0.7716	0.7838	0.7926	25/32 (.7812)	25/32 (.7812)	1.350	1.725	2.100	2.475	2.850	1.150	1.525	1.900	2.275	2.650
7/8 (.8750)-9	0.8990	0.9119	0.9218	29/32 (.9062)	29/32 (.9062)	1.542	1.979	2.417	2.854	3.292	1.319	1.757	2.194	2.632	3.069
1 (1.0000)-8	1.0271	1.0421	1.0521	1-1/32 (1.0312)	1-1/32 (1.0312)	1.750	2.250	2.750	3.250	3.750	1.500	2.000	2.500	3.000	3.500
1-1/8 (1.1250)-7	1.1559	1.1730	1.1834	1-11/64 (1.1719)	1-11/64 (1.1719)	1.982	2.545	3.107	3.670	4.232	1.696	2.259	2.821	3.384	3.946
1-1/4 (1.2500)-7	1.2809	1.2980	1.3084	1-19/64 (1.2969)	1-19/64 (1.2969)	2.107	2.732	3.357	3.982	4.607	1.821	2.446	3.071	3.696	4.321
1-3/8 (1.3750)-6	1.4110	1.4310	1.4416	1-27/64 (1.4219)	1-27/64 (1.4219)	2.375	3.062	3.750	4.437	5.125	2.042	2.729	3.417	4.104	4.792
1-1/2 (1.5000)-6	1.5360	1.5560	1.5665	1-35/64 (1.5469)	1-35/64 (1.5469)	2.500	3.250	4.000	4.750	5.500	2.167	2.917	3.667	4.417	5.167
Unified Fine															
0 (.060)-80	0.0628	0.0665	0.0665	#52 (.0635)	#52 (.0635)	0.165	0.195	0.225	---	---	0.110	0.140	0.170	---	---
3 (.099)-56	0.1029	0.1086	0.1086	#37 (.1040)	#36 (.1065)	0.256	0.305	0.355	0.404	0.454	0.170	0.220	0.269	0.319	0.368
4 (.112)-48	0.1166	0.1229	0.1229	3mm (.1181)	#31 (.1200)	0.293	0.349	0.405	0.461	0.517	0.195	0.251	0.307	0.363	0.419
6 (.138)-40	0.1435	0.1503	0.1503	#26 (.1470)	#25 (.1495)	0.357	0.426	0.495	0.564	0.633	0.238	0.307	0.376	0.445	0.514
8 (.164)-36	0.1701	0.1771	0.1771	#17 (.1730)	#16 (.1770)	0.413	0.495	0.577	0.659	0.741	0.275	0.357	0.439	0.521	0.603
10 (.190)-32	0.1968	0.2041	0.2041	#7 (.2010)	13/64 (.2031)	0.472	0.568	0.662	0.758	0.852	0.315	0.410	0.505	0.600	0.695
1/4 (.250)-28	0.2577	0.2646	0.2661	G (.2610)	6.7mm (.2638)	0.589	0.714	0.839	0.964	1.089	0.393	0.518	0.643	0.768	0.893
5/16 (.3125)-24	0.3215	0.3288	0.3312	21/64 (.3281)	21/64 (.3281)	0.718	0.874	1.030	1.186	1.342	0.479	0.635	0.791	0.947	1.103
3/8 (.3750)-24	0.3840	0.3910	0.3937	25/64 (.3906)	25/64 (.3906)	0.625	0.812	1.000	1.187	1.375	0.542	0.729	0.917	1.104	1.292
7/16 (.4375)-20	0.4483	0.4561	0.4598	29/64 (.4531)	29/64 (.4531)	0.738	0.957	1.176	1.395	1.614	0.638	0.857	1.076	1.295	1.514
1/2 (.5000)-20	0.5108	0.5186	0.5223	33/64 (.5156)	33/64 (.5156)	0.800	1.050	1.300	1.550	1.800	0.700	0.950	1.200	1.450	1.700
9/16 (.5625)-18	0.5745	0.5826	0.5872	37/64 (.5781)	37/64 (.5781)	0.895	1.176	1.457	1.738	2.019	0.784	1.065	1.346	1.627	1.908
5/8 (.6250)-18	0.6370	0.6451	0.6497	41/64 (.6406)	41/64 (.6406)	0.958	1.271	1.583	1.896	2.208	0.847	1.160	1.472	1.785	2.097
3/4 (.7500)-16	0.7635	0.7720	0.7776	49/64 (.7656)	49/64 (.7656)	1.125	1.500	1.875	2.250	2.625	1.000	1.375	1.750	2.125	2.500
7/8 (.8750)-14	0.8905	0.8994	0.9063	57/64 (.8906)	57/64 (.8906)	1.304	1.741	2.179	2.616	3.054	1.161	1.598	2.036	2.473	2.911
1 (1.0000)-12	1.0181	1.0281	1.0361	1-1/64 (1.0156)	1-1/32 (1.0312)	1.500	2.000	2.500	3.000	3.500	1.333	1.833	2.333	2.833	3.333
1-1/8 (1.1250)-12[1]	1.1431	1.1531	1.1611	1-9/64 (1.1406)	1-5/32 (1.1562)	1.625	2.187	2.750	3.312	3.875	1.458	2.021	2.583	3.146	3.708
1-1/4 (1.2500)-12[1]	1.2681	1.2781	1.2861	1-17/64 (1.2656)	1-9/32 (1.2812)	1.750	2.375	3.000	3.625	4.250	1.583	2.208	2.833	3.458	4.083
1-3/8 (1.3750)-12[1]	1.3931	1.4031	1.4111	1-25/64 (1.3906)	1-13/32 (1.4062)	1.875	2.562	3.250	3.937	4.625	1.708	2.396	3.083	3.771	4.458
1-1/2 (1.5000)-12[1]	1.5181	1.5281	1.5361	1-33/64 (1.5156)	1-17/32 (1.5312)	2.000	2.750	3.500	4.250	5.000	1.833	2.583	3.333	4.083	4.833

Tapped Hole Dimensions - Unified Sizes

Thread Size	Countersink M Diameter (120° ± 5° included angle)		Pitch Diameter			H Dimension Minimum Tapping Depth					Tap Major Dia. Max	Thread Pitch "P"
	Min	Max	Min All Class	Class Max 3B	Class Max 2B	1	1.5	2	2.5	3		
Unified Coarse												
1 (.073)-64	0.09	0.11	0.0832	0.0843	0.0850	0.09	0.13	0.16	0.20	0.24	0.0958	0.01563
2 (.086)-56	0.11	0.13	0.0976	0.0989	0.0996	0.10	0.15	0.19	0.23	0.28	0.1117	0.01786
3 (.099)-48	0.12	0.14	0.1126	0.1140	0.1148	0.12	0.17	0.22	0.27	0.32	0.1289	0.02083
4 (.112)-40	0.14	0.17	0.1283	0.1299	0.1308	0.14	0.19	0.25	0.31	0.36	0.1473	0.02500
5 (.125)-40	0.15	0.18	0.1413	0.1430	0.1438	0.15	0.21	0.28	0.34	0.40	0.1603	0.02500
6 (.138)-32	0.17	0.20	0.1583	0.1601	0.1611	0.17	0.24	0.31	0.38	0.45	0.1817	0.03125
8 (.164)-32	0.20	0.23	0.1843	0.1862	0.1872	0.20	0.28	0.36	0.44	0.52	0.2077	0.03125
10 (.190)-24	0.24	0.27	0.2170	0.2192	0.2203	0.23	0.33	0.42	0.52	0.61	0.2475	0.04167
12 (.216)-24	0.26	0.29	0.2430	0.2453	0.2464	0.26	0.37	0.47	0.58	0.69	0.2735	0.04167
1/4 (.250)-20	0.31	0.34	0.2825	0.2851	0.2864	0.30	0.43	0.55	0.68	0.80	0.3187	0.05000
5/16 (.3125)-18	0.38	0.41	0.3486	0.3515	0.3529	0.37	0.53	0.68	0.84	0.99	0.3884	0.05556
3/8 (.3750)-16	0.45	0.48	0.4156	0.4189	0.4203	0.44	0.63	0.81	1.00	1.19	0.4602	0.06250
7/16 (.4375)-14	0.52	0.55	0.4839	0.4875	0.4890	0.51	0.73	0.95	1.17	1.38	0.5343	0.07143
1/2 (.5000)-13[1]	0.59	0.62	0.5499	0.5537	0.5554	0.58	0.83	1.08	1.33	1.58	0.6042	0.07692
9/16 (.5625)-12[1]	0.66	0.69	0.6167	0.6208	0.6225	0.65	0.93	1.21	1.49	1.77	0.6751	0.08333
5/8 (.6250)-11	0.73	0.76	0.6841	0.6885	0.6903	0.72	1.03	1.34	1.65	1.97	0.7477	0.09091
3/4 (.7500)-10	0.86	0.89	0.8149	0.8196	0.8216	0.85	1.23	1.60	1.98	2.35	0.8850	0.10000
7/8 (.8750)-9	1.00	1.03	0.9471	0.9522	0.9543	0.99	1.42	1.86	2.30	2.74	1.0247	0.11111
1 (1.0000)-8	1.14	1.17	1.0812	1.0898	1.0898	1.13	1.63	2.13	2.63	3.13	1.1681	0.12500
1-1/8 (1.1250)-7	1.29	1.32	1.2178	1.2239	1.2262	1.27	1.83	2.39	2.96	3.52	1.3171	0.14286
1-1/4 (1.2500)-7	1.41	1.44	1.3428	1.3490	1.3514	1.39	2.02	2.64	3.27	3.89	1.4421	0.14286
1-3/8 (1.3750)-6	1.56	1.59	1.4832	1.4900	1.4926	1.54	2.23	2.92	3.60	4.29	1.5982	0.16667
1-1/2 (1.5000)-6	1.69	1.72	1.6082	1.6151	1.6177	1.67	2.42	3.17	3.92	4.67	1.7232	0.16667
Unified Fine												
0 (.060)-80	0.07	0.10	0.0681	0.0691	0.0697	0.07	0.10	0.13	---	---	0.0775	0.01250
3 (.099)-56	0.12	0.14	0.1106	0.1119	0.1126	0.12	0.17	0.22	0.27	0.31	0.1247	0.01786
4 (.112)-48	0.14	0.17	0.1256	0.1271	0.1279	0.13	0.19	0.24	0.30	0.36	0.1419	0.02083
6 (.138)-40	0.17	0.20	0.1543	0.1560	0.1569	0.16	0.23	0.30	0.37	0.44	0.1733	0.02500
8 (.164)-36	0.20	0.23	0.1821	0.1840	0.1849	0.19	0.27	0.36	0.44	0.52	0.2032	0.02778
10 (.190)-32	0.23	0.26	0.2103	0.2123	0.2133	0.22	0.32	0.41	0.51	0.60	0.2337	0.03125
1/4 (.250)-28	0.29	0.32	0.2732	0.2754	0.2765	0.29	0.41	0.54	0.66	0.79	0.2995	0.03571
5/16 (.3125)-24	0.36	0.39	0.3395	0.3421	0.3433	0.35	0.51	0.67	0.82	0.98	0.3700	0.04167
3/8 (.3750)-24	0.42	0.45	0.4020	0.4047	0.4059	0.42	0.60	0.79	0.98	1.17	0.4325	0.04167
7/16 (.4375)-20	0.50	0.53	0.4700	0.4731	0.4744	0.49	0.71	0.93	1.14	1.36	0.5062	0.05000
1/2 (.5000)-20	0.56	0.59	0.5325	0.5357	0.5371	0.55	0.80	1.05	1.30	1.55	0.5687	0.05000
9/16 (.5625)-18	0.63	0.66	0.5986	0.6020	0.6035	0.62	0.90	1.18	1.46	1.74	0.6384	0.05556
5/8 (.6250)-18	0.69	0.72	0.6611	0.6646	0.6661	0.68	0.99	1.31	1.62	1.93	0.7009	0.05556
3/4 (.7500)-16	0.82	0.85	0.7906	0.7945	0.7961	0.81	1.19	1.56	1.94	2.31	0.8352	0.06250
7/8 (.8750)-14	0.96	0.99	0.9214	0.9257	0.9274	0.95	1.38	1.82	2.26	2.70	0.9718	0.07143
1 (1.0000)-12	1.10	1.13	1.0542	1.0589	1.0608	1.08	1.58	2.08	2.58	3.08	1.1126	0.08333
1-1/8 (1.1250)-12[1]	1.22	1.25	1.1792	1.1841	1.1860	1.21	1.77	2.33	2.90	3.46	1.2376	0.08333
1-1/4 (1.2500)-12[1]	1.35	1.38	1.3042	1.3092	1.3112	1.33	1.96	2.58	3.21	3.83	1.3626	0.08333
1-3/8 (1.3750)-12[1]	1.47	1.50	1.4292	1.4343	1.4364	1.46	2.15	2.83	3.52	4.21	1.4876	0.08333
1-1/2 (1.5000)-12[1]	1.60	1.63	1.5542	1.5595	1.5615	1.58	2.33	3.08	3.83	4.58	1.6126	0.08333

THROUGH HOLE

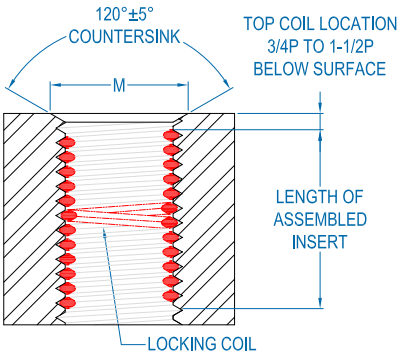

BLIND HOLE

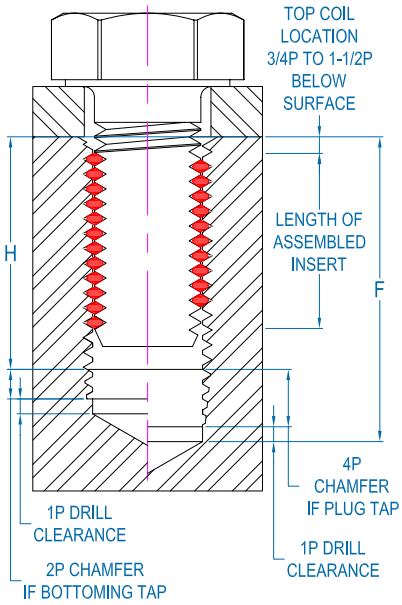

1. Standard size drills are suggested even though these sizes vary slightly from the minor diameter specifications in NASM33537.
2. For plug taps with a nominal diameter of 5/16" or smaller, F minimum allows for a male center on the tap equal in length to the nominal tap diameter divided by 2.
3. All dimensions are in inches.

Drilling Dimensions - Metric Sizes

Thread Size	Minor Diameter (After Tapping)		Suggested Drill Size[1]		F Dimension[2] Minimum Drilling Depth for Taps									
					Plug Taps					Bottoming Taps				
	Min	Max	Aluminum	Steel	1	1.5	2	2.5	3	1	1.5	2	2.5	3
Metric Coarse														
M2X0.4	2.087	2.199	2.10	2.10	5.40	6.40	7.40	8.40	9.40	3.60	4.60	5.60	6.60	7.60
M2.2X0.45	2.297	2.422	2.30	2.35	6.00	7.10	8.20	9.30	10.40	4.00	5.10	6.20	7.30	8.40
M2.5X0.45	2.597	2.722	2.70	2.70	6.45	7.70	8.95	10.20	11.45	4.30	5.55	6.80	8.05	9.30
M3X0.5	3.108	3.248	3.15	3.20	7.50	9.00	10.50	12.00	13.50	5.00	6.50	8.00	9.50	11.00
M3.5X0.6	3.630	3.790	3.70	3.70	8.85	10.60	12.35	14.10	15.85	5.90	7.65	9.40	11.15	12.90
M4X0.7	4.152	4.332	4.20	4.25	10.20	12.20	14.20	16.20	18.20	6.80	8.80	10.80	12.80	14.80
M5X0.8	5.174	5.374	5.20	5.30	12.30	14.80	17.30	19.80	22.30	8.20	10.70	13.20	15.70	18.20
M6X1	6.217	6.407	6.25	6.30	15.00	18.00	21.00	24.00	27.00	10.00	13.00	16.00	19.00	22.00
M7X1	7.217	7.407	7.25	7.30	16.50	20.00	23.50	27.00	30.50	11.00	14.50	18.00	21.50	25.00
M8X1.25	8.271	8.483	8.30	8.40	19.50	23.50	27.50	31.50	35.50	13.00	17.00	21.00	25.00	29.00
M10X1.5	10.324	10.560	10.50	10.50	19.00	24.00	29.00	34.00	39.00	16.00	21.00	26.00	31.00	36.00
M12X1.75[1]	12.379	12.644	12.50	12.50	22.50	28.50	34.50	40.50	46.50	19.00	25.00	31.00	37.00	43.00
M14X2	14.433	14.733	14.50	14.50	26.00	33.00	40.00	47.00	54.00	22.00	29.00	36.00	43.00	50.00
M16X2	16.433	16.733	16.50	16.50	28.00	36.00	44.00	52.00	60.00	24.00	32.00	40.00	48.00	56.00
M18X2.5	18.541	18.896	47/64	47/64	33.00	42.00	51.00	60.00	69.00	28.00	37.00	46.00	55.00	64.00
M20X2.5	20.541	20.896	13/16	13/16	35.00	45.00	55.00	65.00	75.00	30.00	40.00	50.00	60.00	70.00
M22X2.5	22.541	22.896	57/64	57/64	37.00	48.00	59.00	70.00	81.00	32.00	43.00	54.00	65.00	76.00
M24X3	24.649	25.049	25.00	25.00	42.00	54.00	66.00	78.00	90.00	36.00	48.00	60.00	72.00	84.00
M27X3	27.649	28.049	28.00	28.00	45.00	58.50	72.00	85.50	99.00	39.00	52.50	66.00	79.50	93.00
Metric Fine														
M8X1	8.217	8.407	8.25	8.30	18.00	22.00	26.00	30.00	34.00	12.00	16.00	20.00	24.00	28.00
M10X1	10.217	10.407	10.25	10.25	16.00	21.00	26.00	31.00	36.00	14.00	19.00	24.00	29.00	34.00
M10X1.25[1]	10.271	10.483	10.25	10.25	17.50	22.50	27.50	32.50	37.50	15.00	20.00	25.00	30.00	35.00
M12X1.25[1]	12.271	12.483	12.25	12.25	19.50	25.50	31.50	37.50	43.50	17.00	23.00	29.00	35.00	41.00
M12X1.5[1]	12.324	12.560	12.25	12.50	21.00	27.00	33.00	39.00	45.00	18.00	24.00	30.00	36.00	42.00
M14X1.5[1]	14.324	14.560	14.25	14.50	23.00	30.00	37.00	44.00	51.00	20.00	27.00	34.00	41.00	48.00
M16X1.5[1]	16.324	16.560	16.25	16.50	25.00	33.00	41.00	49.00	57.00	22.00	30.00	38.00	46.00	54.00
M18X1.5[1]	18.324	18.560	18.25	18.50	27.00	36.00	45.00	54.00	63.00	24.00	33.00	42.00	51.00	60.00
M20X1.5[1]	20.324	20.560	20.25	20.50	29.00	39.00	49.00	59.00	69.00	26.00	36.00	46.00	56.00	66.00
M22X1.5[1]	22.324	22.560	22.25	22.50	31.00	42.00	53.00	64.00	75.00	28.00	39.00	50.00	61.00	72.00
M18X2	18.433	18.733	18.50	18.50	30.00	39.00	48.00	57.00	66.00	26.00	35.00	44.00	53.00	62.00
M20X2	20.433	20.733	20.50	20.50	32.00	42.00	52.00	62.00	72.00	28.00	38.00	48.00	58.00	68.00
M22X2	22.433	22.733	22.50	22.50	34.00	45.00	56.00	67.00	78.00	30.00	41.00	52.00	63.00	74.00
M24X2	24.433	24.733	24.50	24.50	36.00	48.00	60.00	72.00	84.00	32.00	44.00	56.00	68.00	80.00
M27X2	27.433	27.733	27.50	27.50	39.00	52.50	66.00	79.50	93.00	35.00	48.50	62.00	75.50	89.00
M30X2	30.433	30.733	30.50	30.50	42.00	57.00	72.00	87.00	102.00	38.00	53.00	68.00	83.00	98.00
M33X2	33.433	33.733	33.50	33.50	45.00	61.50	78.00	94.50	111.00	41.00	57.50	74.00	90.50	107.00
M39X2	39.433	39.733	39.50	39.50	51.00	70.50	90.00	109.00	129.00	47.00	66.50	86.00	105.50	125.00
M36X3	36.649	37.049	37.00	37.00	54.00	72.00	90.00	108.00	126.00	48.00	66.00	84.00	102.00	120.00
M39X3	39.649	40.049	40.00	40.00	57.00	76.50	96.00	115.50	135.00	51.00	70.50	90.00	109.50	129.00

Tapped Hole Dimensions - Metric Sizes

Thread Size	Countersink M Diameter (120°±5° included angle)		Pitch Diameter			H Dimension Minimum Tapping Depth					Tap Major Dia. Max
	Min	Max	Min All Classes	Max Class 4H	Max Class 5H	1	1.5	2	2.5	3	
Metric Coarse											
M2X0.4	2.30	2.70	2.260	2.295	2.310	2.4	3.4	4.4	5.4	6.4	2.581
M2.2X0.45	2.60	3.00	2.492	2.532	2.547	2.7	3.8	4.9	6.0	7.1	2.845
M2.5X0.45	2.90	3.40	2.792	2.832	2.847	3.0	4.2	5.5	6.7	8.0	3.147
M3X0.5	3.40	4.00	3.325	3.367	3.384	3.5	5.0	6.5	8.0	9.5	3.716
M3.5X0.6	4.10	4.70	3.890	3.940	3.959	4.1	5.9	7.6	9.4	11.1	4.354
M4X0.7	4.70	5.30	4.455	4.509	4.529	4.7	6.7	8.7	10.7	12.7	5.006
M5X0.8	5.80	6.40	5.520	5.577	5.597	5.8	8.3	10.8	13.3	15.8	6.142
M6X1	7.10	7.70	6.650	6.719	6.742	7.0	10.0	13.0	16.0	19.0	7.422
M7X1	8.10	8.70	7.650	7.719	7.742	8.0	11.5	15.0	18.5	22.0	8.423
M8X1.25	9.50	10.10	8.812	8.886	8.911	9.3	13.3	17.3	21.3	25.3	9.787
M10X1.5	11.80	12.40	10.974	11.061	11.089	11.5	16.5	21.5	26.5	31.5	12.131
M12X1.75[1]	14.20	14.80	13.137	13.236	13.271	13.8	19.8	25.8	31.8	37.8	14.478
M14X2	16.50	17.10	15.299	15.406	15.444	16.0	23.0	30.0	37.0	44.0	16.822
M16X2	18.50	19.10	17.299	17.406	17.444	18.0	26.0	34.0	42.0	50.0	18.821
M18X2.5	21.20	21.80	19.624	19.738	19.778	20.5	29.5	38.5	47.5	56.5	21.514
M20X2.5	23.20	23.80	21.624	21.738	21.778	22.5	32.5	42.5	52.5	62.5	23.513
M22X2.5	25.20	25.80	23.624	23.738	23.778	24.5	35.5	46.5	57.5	68.5	25.512
M24X3	27.90	28.50	25.948	26.093	26.135	27.0	39.0	51.0	63.0	75.0	28.237
M27X3	30.90	31.50	28.948	29.093	29.135	30.0	43.5	57.0	70.5	84.0	31.238
Metric Fine											
M8X1	9.10	9.70	8.650	8.719	8.742	9.0	13.0	17.0	21.0	25.0	9.423
M10X1	11.10	11.70	10.650	10.719	10.742	11.0	16.0	21.0	26.0	31.0	11.422
M10X1.25[1]	11.50	12.10	10.812	10.886	10.911	11.3	16.3	21.3	26.3	31.3	11.788
M12X1.25[1]	13.50	14.10	12.812	12.898	12.926	13.3	19.3	25.3	31.3	37.3	13.787
M12X1.5[1]	13.80	14.40	12.974	13.067	13.099	13.5	19.5	25.5	31.5	37.5	14.133
M14X1.5[1]	15.80	16.40	14.974	15.067	15.099	15.5	22.5	29.5	36.5	43.5	16.131
M16X1.5[1]	17.80	18.40	16.974	17.067	17.099	17.5	25.5	33.5	41.5	49.5	18.131
M18X1.5[1]	19.80	20.40	18.974	19.067	19.099	19.5	28.5	37.5	46.5	55.5	20.132
M20X1.5[1]	21.80	22.40	20.974	21.067	21.099	21.5	31.5	41.50	51.5	61.5	22.131
M22X1.5[1]	23.80	24.40	22.974	23.067	23.099	23.5	34.5	45.50	56.5	67.5	24.130
M18X2	20.50	21.10	19.299	19.406	19.444	20.0	29.0	38.0	47.0	56.0	20.823
M20X2	22.50	23.10	21.299	21.406	21.444	22.0	32.0	42.0	52.0	62.0	22.822
M22X2	24.50	25.10	23.299	23.406	23.444	24.0	35.0	46.0	57.0	68.0	24.823
M24X2	26.50	27.10	25.299	25.414	25.454	26.0	38.0	50.0	62.0	74.0	26.820
M27X2	29.50	30.10	28.299	28.414	28.455	29.0	42.5	56.0	69.5	83.0	29.822
M30X2	32.50	33.10	31.299	31.414	31.454	32.0	47.0	62.0	77.0	92.0	32.822
M33X2	35.50	36.10	34.299	34.414	34.454	35.0	51.5	68.0	84.5	101.0	35.822
M39X2	41.50	42.10	40.299	40.414	40.454	41.0	60.5	80.0	99.5	119.0	41.821
M36X3	39.90	40.50	37.948	38.093	38.135	39.0	57.0	75.0	93.0	111.0	40.236
M39X3	42.90	43.50	40.948	41.093	41.135	42.0	61.5	81.0	100.5	120.0	43.236

THROUGH HOLE

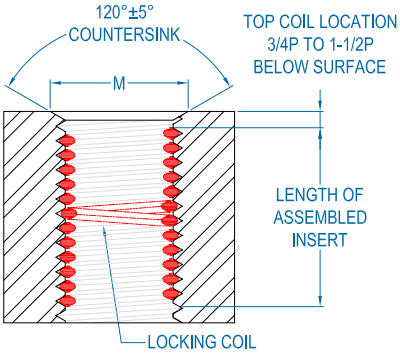

BLIND HOLE

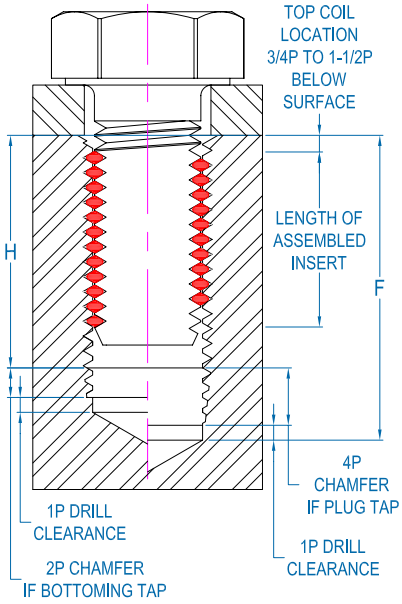

1. Standard size drills are suggested even though some sizes vary slightly from the minor diameter specifications in MA1567.
2. For plug taps with a nominal diameter of M8 or smaller, F minimum allows for a male center on the tap equal in length to the nominal tap diameter divided by 2.
3. All dimensions are in millimeters.

CoilThread Inserts - Materials and Coatings

304 Stainless Steel (standard)

- Satisfies most application requirements for strength, corrosion resistance and temperature capability.
- Covered by specification AS7245.
- **Color:** Silver

Phosphor Bronze

- Ideal for salt water applications and has superior corrosion resistance.
- Covered by specification AMS7247.
- **Color:** Bronze

Inconel X-750

- For higher temperature capability and reliability applications.
- Environments up to 1,000° F.
- Covered by specification AS7246.
- **Color:** Blue

Nitronic 60®

- Specifically engineered to minimize galling and fretting when used with stainless steel screws.
- Excellent high temperature performance.
- Alloy number UNS S21800.
- **Color:** Silver

Platings and Coatings

Dry Film Lubricant

- Applied to limit galling between the insert and the fastener, and improves installation.
- Good corrosion protection.
- In accordance with AS5272.
- **Color:** Dark Gray

Silver

- Increases lubricity at higher temperatures.
- In accordance with AMS2410, AMS2411, or AMS2412.
- **Color:** Cloudy White

Electroless Nickel

- Provides wear resistance and corrosion protection.
- In accordance with AMS-C-26074.
- **Color**: Silver

Xylan

- Excellent galvanic corrosion protection.
- Provides lubrication for improved installation.
- Eliminates the need for zinc primers.
- **Color:** Black

Cadmium

- Superior corrosion protection.
- Decrease the coefficient of friction between the insert and the bolt to minimize galling.
- In accordance with AMS-QQ-P-416.
- **Color:** Olive Drab to Dark Brown Chromate (Locking Inserts)
- **Color:** Gold to Yellow Chromate (Non-Locking Inserts)

Passivation

- **Not** actually a plating/coating, rather a chemical cleaning.
- In accordance with AMS2700.
- **Color:** Silver

Color Identifier

- For Identification only (printer's ink).
- **Color:** Green
- **Color:** Blue

CoilThread Inserts - Part Number System

The CoilThread insert part numbering system was designed to make identifying and ordering KATO inserts quick and easy. Each letter and number is used to clearly identify the insert type, style, size, material, length, and finish.

The KATO insert part number includes up to 7 segments. The example below is a Tangless screw locking CoilThread insert, 6-32 thread size, made from 304 stainless steel, 1.5D nominal length, with optional dry film lubricant finish, and supplied on a strip-feed reel (ideal for power installation).

Insert Type:
- **Blank** - Tanged Insert
- **2** - CoilThread II Tangless Insert

Size Designation:
See pages 20-21

Nominal Length:
See pages 20-21

Packaging:
- **Blank** - For Bulk
- **SF** - Strip-Feed Reel

2 TLC - 06 C - 0207 W SF

Insert Style:
- **TLC** - Thread, Locking, Coarse
- **TLF** - Thread, Locking, Fine
- **TLM** - Thread, Locking, Metric
- **TNC** - Thread, Non-Locking, Coarse
- **TNF** - Thread, Non-Locking, Fine
- **TNM** - Thread, Non-Locking, Metric

Material:
- **B** - Phosphor Bronze
- **C** - CRES Steel (304 Stainless Steel)
- **N** - Nitronic 60
- **M** - Nimonic 90
- **T** - Inconel X

Finish:
- **Blank** - No Finish
- **W** - Dry Film Lubricant
- **Y** - Cadmium
- **V** - Silver Plating
- **A** - Passivation
- **B** - Blue Dye
- **G** - Green Dye
- **P** - Xylan

Tangless CoilThread

Non-Locking Insert

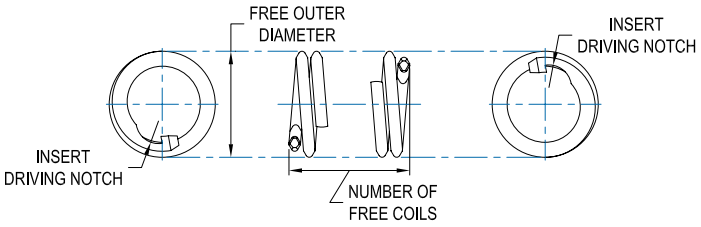

Locking Insert

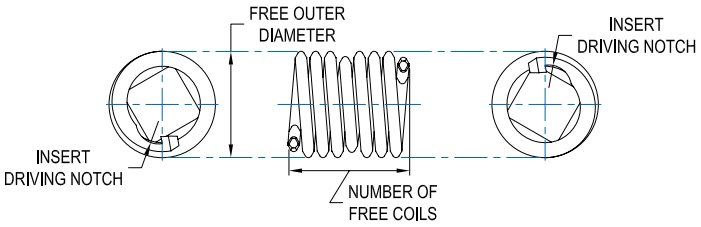

CoilThread

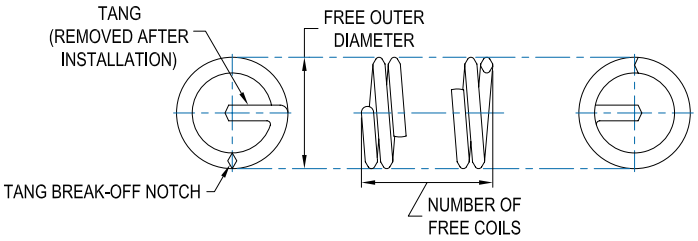

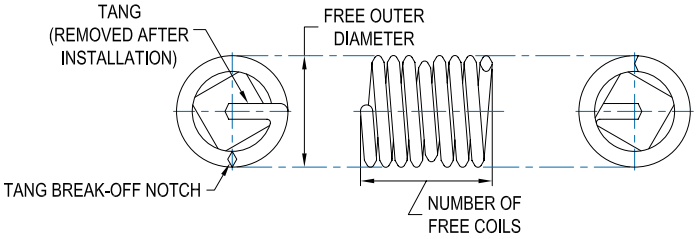

Notes:

1. All non-plated KATO Locking CoilThread inserts (Tangless and tanged) are dyed red for identification in accordance with NAS1130, NA0276, and NASM21209. The red dye is printer's ink and may be removed with a cleaning solution.
2. Dry Film Lubricant and/or the Cadmium plating are called out in NAS1130, NASM21209, NA0276, MA3280, MA3281, MA3330, and MA3331. Any other coatings or platings will deviate from these specifications.

CoilThread Inserts - Dimensions

Thread Size	Size Designation	Nominal Length[1]					Free Outer Diameter		Number of Free Coils[2]				
		Length of Insert (in Diameter)							Nominal Length (Diameter)				
		1	1.5	2	2.5	3	Min.	Max.	1	1.5	2	2.5	3
Unified Coarse													
1 (.073)-64	01	0.073	0.110	0.146	0.182	0.219	0.095	0.103	2-3/4	4-7/8	6-7/8	8-7/8	10-7/8
2 (.086)-56	02	0.086	0.129	0.172	0.215	0.258	0.110	0.119	3	5-1/4	7-3/8	9-5/8	11-7/8
3 (.099)-48	03	0.099	0.148	0.198	0.248	0.297	0.128	0.139	2-7/8	5	7-1/4	9-3/8	11-1/2
4 (.112)-40	04	0.112	0.168	0.224	0.280	0.336	0.144	0.159	2-3/4	4-3/4	6-3/4	8-7/8	10-7/8
5 (.125)-40	05	0.125	0.188	0.250	0.312	0.375	0.158	0.173	3-1/4	5-1/2	7-3/4	10	12-1/4
6 (.138)-32	06	0.138	0.207	0.276	0.345	0.414	0.178	0.193	2-3/4	4-3/4	6-7/8	8-7/8	10-7/8
8 (.164)-32	2	0.164	0.246	0.328	0.410	0.492	0.205	0.220	3-1/2	6	8-3/8	10-3/4	13-1/4
10 (.190)-24	3	0.190	0.285	0.380	0.475	0.570	0.244	0.259	2-7/8	5	7-1/8	9-1/4	11-3/8
12 (.216)-24	1	0.216	0.324	0.432	0.540	0.648	0.270	0.285	3-1/2	6	8-3/8	10-5/8	13-1/8
1/4 (.250)-20	4	0.250	0.375	0.500	0.625	0.750	0.310	0.330	3-3/8	5-3/4	8	10-3/8	12-3/4
5/16 (.3125)-18	5	0.312	0.469	0.625	0.781	0.938	0.380	0.400	4	6-5/8	9-1/4	11-7/8	14-5/8
3/8 (.3750)-16	6	0.375	0.562	0.750	0.938	1.125	0.452	0.472	4-3/8	7-1/4	10	12-7/8	15-3/4
7/16 (.4375)-14	7	0.438	0.656	0.875	1.094	1.312	0.526	0.551	4-1/2	7-3/8	10-1/4	13-1/8	16-1/8
1/2 (.5000)-13	8	0.500	0.750	1.000	1.250	1.500	0.597	0.622	4-7/8	7-7/8	11	14-1/8	17-1/8
9/16 (.5625)-12	9	0.562	0.844	1.125	1.406	1.688	0.669	0.694	5-1/8	8-1/4	11-1/2	14-3/4	17-7/8
5/8 (.6250)-11	10	0.625	0.938	1.250	1.562	1.875	0.742	0.767	5-1/4	8-1/2	11-3/4	15	18-3/8
3/4 (.750)-10	12	0.750	1.125	1.500	1.875	2.250	0.881	0.906	5-7/8	9-3/8	13	16-1/2	20-1/8
7/8 (.8750)-9	14	0.875	1.312	1.750	2.188	2.625	1.022	1.052	6-1/4	10	13-3/4	17-1/2	21-1/4
1 (1.0000)-8	16	1.000	1.500	2.000	2.500	3.000	1.166	1.196	6-3/8	10-1/8	14	17-3/4	21-5/8
1-1/8 (1.1250)-7	18	1.125	1.688	2.250	2.812	3.375	1.315	1.355	6-1/8	9-7/8	13-5/8	17-1/2	21-1/4
1-1/4 (1.2500)-7	20	1.250	1.875	2.500	3.125	3.750	1.443	1.483	7	11-1/4	15-3/8	19-1/2	23-3/4
1-3/8 (1.3750)-6	22	1.375	2.062	2.750	3.438	4.125	1.598	1.643	6-1/2	10-1/2	14-3/8	18-3/8	22-1/4
1-1/2 (1.5000)-6	24	1.500	2.250	3.000	3.750	4.500	1.727	1.772	7-1/4	11-1/2	15-7/8	20-1/8	24-1/2
Unified Fine													
0 (.060)-80	00	0.060	0.090	0.120	---	---	---	---	3	5-1/2	7-3/8	---	---
3 (.099)-56	03	0.099	0.148	0.198	0.248	0.297	0.131	0.146	3-3/8	5-5/8	8	10-3/8	12-5/8
4 (.112)-48	04	0.112	0.168	0.224	0.280	0.336	0.147	0.162	3-3/8	5-5/8	7-7/8	10-1/4	12-1/2
6 (.138)-40	06	0.138	0.207	0.276	0.345	0.414	0.173	0.193	3-1/2	6	8-3/8	10-3/4	13-1/4
8 (.164)-36	2	0.164	0.246	0.328	0.410	0.492	0.204	0.224	3-7/8	6-1/2	9-1/8	11-5/8	14-1/4
10 (.190)-32	3	0.190	0.285	0.380	0.475	0.570	0.236	0.256	4-1/8	6-7/8	9-1/2	12-1/4	14-7/8
1/4 (.250)-28	4	0.250	0.375	0.500	0.625	0.750	0.306	0.326	5	8-1/4	11-3/8	14-1/2	17-5/8
5/16 (.3125)-24	5	0.312	0.469	0.625	0.781	0.938	0.380	0.400	5-1/2	8-7/8	12-1/4	15-5/8	19
3/8 (.3750)-24	6	0.375	0.562	0.750	0.938	1.125	0.448	0.468	6-7/8	11	15	19-1/8	23-1/8
7/16 (.4375)-20	7	0.438	0.656	0.875	1.094	1.312	0.524	0.549	6-5/8	10-5/8	14-5/8	18-1/2	22-1/2
1/2 (.5000)-20	8	0.500	0.750	1.000	1.250	1.500	0.592	0.617	7-7/8	12-3/8	16-7/8	21-3/8	25-7/8
9/16 (.5625)-18	9	0.562	0.844	1.125	1.406	1.688	0.666	0.691	8	12-1/2	17-1/8	21-3/4	26-1/4
5/8 (.6250)-18	10	0.625	0.938	1.250	1.562	1.875	0.733	0.758	9	14-1/8	19-1/4	24-1/4	29-3/8
3/4 (.750)-16	12	0.750	1.125	1.500	1.875	2.250	0.876	0.901	9-3/4	15-1/8	20-5/8	26	31-1/2
7/8 (.8750)-14	14	0.875	1.312	1.750	2.188	2.625	1.021	1.051	9-7/8	15-1/2	21-1/8	26-5/8	32-1/4
1 (1.0000)-12	16	1.000	1.500	2.000	2.500	3.000	1.169	1.199	9-5/8	15	20-1/2	26	31-1/2
1-1/8 (1.1250)-12	18	1.125	1.688	2.250	2.812	3.375	1.304	1.334	11-1/8	17-1/4	23-3/8	29-1/2	35-3/4
1-1/4 (1.2500)-12	20	1.250	1.875	2.500	3.125	3.750	1.439	1.469	12-1/2	19-3/8	26-1/4	33	39-7/8
1-3/8 (1.3750)-12	22	1.375	2.062	2.750	3.438	4.125	1.575	1.610	13-3/4	21-3/8	28-7/8	36-1/2	44
1-1/2 (1.5000)-12	24	1.500	2.250	3.000	3.750	4.500	1.710	1.745	15-1/4	23-1/2	31-5/8	39-7/8	48-1/8

1. Nominal length is a calculated number and cannot be measured in the free state. It is the actual installed length plus 1/2 pitch.
2. The number of free coils is the total number of revolutions, and has a tolerance of ±1/4 coil. For Tangless inserts, the number of coils is counted from notch to notch. For tanged inserts, the number of coils is counted 90° from the tang.

CoilThread Inserts - Dimensions

Thread Size & Designation	Nominal Length[1]					Free Outer Diameter		Number of Free Coils[2]				
	Length of Insert (in Diameter)							Nominal Length (Diameter)				
	1	1.5	2	2.5	3	Min.	Max.	1	1.5	2	2.5	3
Metric Coarse												
M2X0.4	2.0	3.0	4.0	5.0	6.0	2.50	2.70	3-1/4	5-1/2	7-3/4	10-1/8	12-3/8
M2.2X0.45	2.2	3.3	4.4	5.5	6.6	2.80	3.00	3-1/8	5-3/8	7-5/8	9-7/8	12-1/8
M2.5X0.45	2.5	3.8	5.0	6.3	7.5	3.20	3.70	3-3/8	5-3/4	8-1/8	10-1/2	12-3/4
M3X0.5	3.0	4.5	6.0	7.5	9.0	3.80	4.35	3-3/4	6-3/8	8-7/8	11-3/8	13-7/8
M3.5X0.6	3.5	5.3	7.0	8.8	10.5	4.40	4.95	3-3/4	6-3/8	8-3/4	11-3/8	13-3/4
M4X0.7	4.0	6.0	8.0	10.0	12.0	5.05	5.60	3-5/8	6-1/8	8-5/8	11-1/8	13-5/8
M5X0.8	5.0	7.5	10.0	12.5	15.0	6.25	6.80	4-1/8	6-7/8	9-5/8	12-3/8	15-1/8
M6X1	6.0	9.0	12.0	15.0	18.0	7.40	7.95	4	6-3/4	9-1/2	12-1/8	14-7/8
M7X1	7.0	10.5	14.0	17.5	21.0	8.65	9.20	4-7/8	8	11-1/8	14-1/8	17-1/4
M8X1.25	8.0	12.0	16.0	20.0	24.0	9.80	10.35	4-1/2	7-3/8	10-1/4	13-1/4	16-1/8
M10X1.5	10.0	15.0	20.0	25.0	30.0	11.95	12.50	4-7/8	8	11-1/8	14-1/4	17-3/8
M12X1.75	12.0	18.0	24.0	30.0	36.0	14.30	15.00	5	8-1/4	11-1/2	14-5/8	17-7/8
M14X2	14.0	21.0	28.0	35.0	42.0	16.65	17.35	5-1/8	8-1/2	11-3/4	15	18-3/8
M16X2	16.0	24.0	32.0	40.0	48.0	18.90	19.60	6-1/8	9-3/4	13-1/2	17-1/4	21
M18X2.5	18.0	27.0	36.0	45.0	54.0	21.30	22.00	5-3/8	8-7/8	12-1/4	15-5/8	19
M20X2.5	20.0	30.0	40.0	50.0	60.0	23.55	24.40	6-1/8	9-7/8	13-5/8	17-3/8	21-1/8
M22X2.5	22.0	33.0	44.0	55.0	66.0	25.90	26.90	6-3/4	10-7/8	14-7/8	19	23-1/8
M24X3	24.0	36.0	48.0	60.0	72.0	28.00	29.00	6-1/8	10	13-3/4	17-1/2	21-3/8
M27X3	27.0	40.5	54.0	67.5	81.0	31.40	32.40	7	11-1/4	15-1/2	19-3/4	24
Metric Fine												
M8X1	8.0	12.0	16.0	20.0	24.0	9.70	10.25	5-7/8	9-3/8	13	16-1/2	20-1/8
M10X1	10.0	15.0	20.0	25.0	30.0	11.95	12.50	7-5/8	12	16-1/2	21	25-1/2
M10X1.25	10.0	15.0	20.0	25.0	30.0	12.10	12.65	5-7/8	9-1/2	13-1/8	16-3/4	20-3/8
M12X1.25	12.0	18.0	24.0	30.0	36.0	14.30	15.00	7-1/4	11-5/8	15-7/8	20-1/4	24-1/2
M12X1.5	12.0	18.0	24.0	30.0	36.0	14.25	14.95	6	9-5/8	13-3/8	17	20-3/4
M14X1.5	14.0	21.0	28.0	35.0	42.0	16.55	17.25	7-1/8	11-3/8	15-5/8	20	24-1/4
M16X1.5	16.0	24.0	32.0	40.0	48.0	18.90	19.60	8-1/4	13-1/8	18	22-3/4	27-5/8
M18X1.5	18.0	27.0	36.0	45.0	54.0	21.05	21.75	9-1/2	15	20-3/8	25-7/8	31-3/8
M20X1.5	20.0	30.0	40.0	50.0	60.0	23.15	24.00	10-3/4	16-7/8	22-7/8	28-7/8	35
M22X1.5	22.0	33.0	44.0	55.0	66.0	25.55	26.45	11-7/8	18-1/2	25-1/8	31-5/8	38-1/4
M18X2	18.0	27.0	36.0	45.0	54.0	21.15	21.85	7	11-1/8	15-3/8	19-1/2	23-5/8
M20X2	20.0	30.0	40.0	50.0	60.0	23.20	24.05	7-7/8	12-1/2	17-1/4	21-7/8	26-1/2
M22X2	22.0	33.0	44.0	55.0	66.0	25.60	26.50	8-3/4	13-3/4	18-7/8	23-7/8	29
M24X2	24.0	36.0	48.0	60.0	72.0	28.10	29.10	9-1/2	15	20-3/8	25-7/8	31-3/4
M27X2	27.0	40.5	54.0	67.5	81.0	31.30	32.30	10-7/8	17	23-1/4	29-3/8	35-1/2
M30X2	30.0	45.0	60.0	75.0	90.0	34.50	35.70	12-1/4	19-1/8	25-7/8	32-3/4	39-1/2
M33X2	33.0	49.5	66.0	82.5	99.0	37.80	39.20	13-5/8	21-1/8	28-5/8	36	43-1/2
M39X2	39.0	58.5	78.0	97.5	117.0	44.30	45.70	16-3/8	25-1/4	34-1/8	43	51-7/8
M36X3	36.0	54.0	72.0	90.0	108.0	41.30	42.70	9-3/4	15-1/4	20-7/8	26-1/2	32
M39X3	39.0	58.5	78.0	97.5	117.0	44.40	45.80	10-3/4	16-3/4	22-3/4	28-7/8	34-7/8

3. All dimensions for unified sizes are in inches.

4. All dimensions for metric sizes are in millimeters.

CoilThread Part Numbers & Cross References

Unified Coarse - Locking Series

Thread Size	Nominal Length (in Dia.)	Tangless		Tanged		
		CoilThread No.	NA/NAS No.	CoilThread No.	MA/MS No.	Heli-Coil No.
1-64	1	2TLC-01C-0073	---	---	---	---
	1.5	2TLC-01C-0110	---	---	---	---
	2	2TLC-01C-0146	---	---	---	---
	2.5	---	---	---	---	---
	3	---	---	---	---	---
2-56	1	2TLC-02C-0086	NAS1130-02L10	TLC-02C-0086	MS21209C0210	3585-02CN086
	1.5	2TLC-02C-0129	NAS1130-02L15	TLC-02C-0129	MS21209C0215	3585-02CN129
	2	2TLC-02C-0172	NAS1130-02L20	TLC-02C-0172	MS21209C0220	3585-02CN172
	2.5	2TLC-02C-0215	NAS1130-02L25	TLC-02C-0215	MS21209C0225	3585-02CN215
	3	2TLC-02C-0258	NAS1130-02L30	TLC-02C-0258	MS21209C0230	3585-02CN258
3-48	1	---	---	TLC-03C-0099	MS21209C0310	3585-03CN099
	1.5	---	---	TLC-03C-0148	MS21209C0315	3585-03CN148
	2	---	---	TLC-03C-0198	MS21209C0320	3585-03CN198
	2.5	---	---	TLC-03C-0248	MS21209C0325	3585-03CN248
	3	---	---	TLC-03C-0297	MS21209C0330	3585-03CN297
4-40	1	2TLC-04C-0112	NAS1130-04L10	TLC-04C-0112	MS21209C0410	3585-04CN112
	1.5	2TLC-04C-0168	NAS1130-04L15	TLC-04C-0168	MS21209C0415	3585-04CN168
	2	2TLC-04C-0224	NAS1130-04L20	TLC-04C-0224	MS21209C0420	3585-04CN224
	2.5	2TLC-04C-0280	NAS1130-04L25	TLC-04C-0280	MS21209C0425	3585-04CN280
	3	2TLC-04C-0336	NAS1130-04L30	TLC-04C-0336	MS21209C0430	3585-04CN336
5-40	1	---	---	TLC-05C-0125	MS21209C0510	3585-05CN125
	1.5	---	---	TLC-05C-0188	MS21209C0515	3585-05CN188
	2	---	---	TLC-05C-0250	MS21209C0520	3585-05CN250
	2.5	---	---	TLC-05C-0312	MS21209C0525	3585-05CN312
	3	---	---	TLC-05C-0375	MS21209C0530	3585-05CN375
6-32	1	2TLC-06C-0138	NAS1130-06L10	TLC-06C-0138	MS21209C0610	3585-06CN138
	1.5	2TLC-06C-0207	NAS1130-06L15	TLC-06C-0207	MS21209C0615	3585-06CN207
	2	2TLC-06C-0276	NAS1130-06L20	TLC-06C-0276	MS21209C0620	3585-06CN276
	2.5	2TLC-06C-0345	NAS1130-06L25	TLC-06C-0345	MS21209C0625	3585-06CN345
	3	2TLC-06C-0414	NAS1130-06L30	TLC-06C-0414	MS21209C0630	3585-06CN414
8-32	1	2TLC-2C-0164	NAS1130-08L10	TLC-2C-0164	MS21209C0810	3585-2CN164
	1.5	2TLC-2C-0246	NAS1130-08L15	TLC-2C-0246	MS21209C0815	3585-2CN246
	2	2TLC-2C-0328	NAS1130-08L20	TLC-2C-0328	MS21209C0820	3585-2CN328
	2.5	2TLC-2C-0410	NAS1130-08L25	TLC-2C-0410	MS21209C0825	3585-2CN410
	3	2TLC-2C-0492	NAS1130-08L30	TLC-2C-0492	MS21209C0830	3585-2CN492
10-24	1	2TLC-3C-0190	NAS1130-3CL10	TLC-3C-0190	MS21209C1-10	3585-3CN190
	1.5	2TLC-3C-0285	NAS1130-3CL15	TLC-3C-0285	MS21209C1-15	3585-3CN285
	2	2TLC-3C-0380	NAS1130-3CL20	TLC-3C-0380	MS21209C1-20	3585-3CN380
	2.5	2TLC-3C-0475	NAS1130-3CL25	TLC-3C-0475	MS21209C1-25	3585-3CN475
	3	2TLC-3C-0570	NAS1130-3CL30	TLC-3C-0570	MS21209C1-30	3585-3CN570
12-24	1	---	---	TLC-1C-0216	MS21209C2-10	3585-1CN216
	1.5	---	---	TLC-1C-0324	MS21209C2-15	3585-1CN324
	2	---	---	TLC-1C-0432	MS21209C2-20	3585-1CN432
	2.5	---	---	TLC-1C-0540	MS21209C2-25	3585-1CN540
	3	---	---	TLC-1C-0648	MS21209C2-30	3585-1CN648
1/4-20	1	2TLC-4C-0250	NAS1130-4L10	TLC-4C-0250	MS21209C4-10	3585-4CN250
	1.5	2TLC-4C-0375	NAS1130-4L15	TLC-4C-0375	MS21209C4-15	3585-4CN375
	2	2TLC-4C-0500	NAS1130-4L20	TLC-4C-0500	MS21209C4-20	3585-4CN500
	2.5	2TLC-4C-0625	NAS1130-4L25	TLC-4C-0625	MS21209C4-25	3585-4CN625
	3	2TLC-4C-0750	NAS1130-4L30	TLC-4C-0750	MS21209C4-30	3585-4CN750

CoilThread Part Numbers & Cross References

Unified Coarse - Locking Series

Thread Size	Nominal Length (in Dia.)	Tangless		Tanged		
		CoilThread No.	NA/NAS No.	CoilThread No.	MA/MS No.	Heli-Coil No.
5/16-18	1	2TLC-5C-0312	NAS1130-5CL10	TLC-5C-0312	MS21209C5-10	3585-5CN312
	1.5	2TLC-5C-0469	NAS1130-5CL15	TLC-5C-0469	MS21209C5-15	3585-5CN469
	2	2TLC-5C-0625	NAS1130-5CL20	TLC-5C-0625	MS21209C5-20	3585-5CN625
	2.5	2TLC-5C-0781	NAS1130-5CL25	TLC-5C-0781	MS21209C5-25	3585-5CN781
	3	2TLC-5C-0938	NAS1130-5CL30	TLC-5C-0938	MS21209C5-30	3585-5CN938
3/8-16	1	2TLC-6C-0375	NAS1130-6CL10	TLC-6C-0375	MS21209C6-10	3585-6CN375
	1.5	2TLC-6C-0562	NAS1130-6CL15	TLC-6C-0562	MS21209C6-15	3585-6CN562
	2	2TLC-6C-0750	NAS1130-6CL20	TLC-6C-0750	MS21209C6-20	3585-6CN750
	2.5	2TLC-6C-0938	NAS1130-6CL25	TLC-6C-0938	MS21209C6-25	3585-6CN938
	3	---	---	TLC-6C-1125	MS21209C6-30	3585-6CN1125
7/16-14	1	2TLC-7C-0438	---	TLC-7C-0438	MS21209C7-10	3585-7CN438
	1.5	2TLC-7C-0656	---	TLC-7C-0656	MS21209C7-15	3585-7CN656
	2	2TLC-7C-0875	---	TLC-7C-0875	MS21209C7-20	3585-7CN875
	2.5	---	---	TLC-7C-1094	MS21209C7-25	3585-7CN1094
	3	---	---	TLC-7C-1312	MS21209C7-30	3585-7CN1312
1/2-13	1	2TLC-8C-0500	---	TLC-8C-0500	MS21209C8-10	3585-8CN500
	1.5	2TLC-8C-0750	---	TLC-8C-0750	MS21209C8-15	3585-8CN750
	2	2TLC-8C-1000	---	TLC-8C-1000	MS21209C8-20	3585-8CN1000
	2.5	---	---	TLC-8C-1250	MS21209C8-25	3585-8CN1250
	3	---	---	TLC-8C-1500	MS21209C8-30	3585-8CN1500
9/16-12	1	---	---	TLC-9C-0562	MS21209C9-10	3585-9CN562
	1.5	---	---	TLC-9C-0844	MS21209C9-15	3585-9CN844
	2	---	---	TLC-9C-1125	MS21209C9-20	3585-9CN1125
	2.5	---	---	TLC-9C-1406	MS21209C9-25	3585-9CN1406
	3	---	---	TLC-9C-1688	MS21209C9-30	3585-9CN1688
5/8-11	1	---	---	TLC-10C-0625	MS21209C1010	3585-10CN625
	1.5	---	---	TLC-10C-0938	MS21209C1015	3585-10CN938
	2	---	---	TLC-10C-1250	MS21209C1020	3585-10CN1250
	2.5	---	---	TLC-10C-1562	MS21209C1025	3585-10CN1562
	3	---	---	TLC-10C-1875	MS21209C1030	3585-10CN1875
3/4-10	1	---	---	TLC-12C-0750	MS21209C1210	3585-12CN750
	1.5	---	---	TLC-12C-1125	MS21209C1215	3585-12CN1125
	2	---	---	TLC-12C-1500	MS21209C1220	3585-12CN1500
	2.5	---	---	TLC-12C-1875	MS21209C1225	3585-12CN1875
	3	---	---	TLC-12C-2250	MS21209C1230	3585-12CN2250
7/8-9	1	---	---	TLC-14C-0875	MS21209C1410	3585-14CN875
	1.5	---	---	TLC-14C-1312	MS21209C1415	3585-14CN1312
	2	---	---	TLC-14C-1750	MS21209C1420	3585-14CN1750
	2.5	---	---	TLC-14C-2188	MS21209C1425	3585-14CN2188
	3	---	---	TLC-14C-2625	MS21209C1430	3585-14CN2625
1-8	1	---	---	TLC-16C-1000	MS21209C1610	3585-16CN1000
	1.5	---	---	TLC-16C-1500	MS21209C1615	3585-16CN1500
	2	---	---	TLC-16C-2000	MS21209C1620	3585-16CN2000
	2.5	---	---	TLC-16C-2500	MS21209C1625	3585-16CN2500
	3	---	---	TLC-16C-3000	MS21209C1630	3585-16CN3000

CoilThread Part Numbers & Cross References

Unified Coarse - Locking Series

Thread Size	Nominal Length (in Dia.)	Tangless		Tanged		
		CoilThread No.	NA/NAS No.	CoilThread No.	MA/MS No.	Heli-Coil No.
1-1/8-7	1	---	---	TLC-18C-1125	MS21209C1810	3585-18CN1125
	1.5	---	---	TLC-18C-1688	MS21209C1815	3585-18CN1688
	2	---	---	TLC-18C-2250	MS21209C1820	3585-18CN2250
	2.5	---	---	TLC-18C-2812	MS21209C1825	3585-18CN2812
	3	---	---	TLC-18C-3375	MS21209C1830	3585-18CN3375
1-1/4-7	1	---	---	TLC-20C-1250	MS21209C2010	3585-20CN1250
	1.5	---	---	TLC-20C-1875	MS21209C2015	3585-20CN1875
	2	---	---	TLC-20C-2500	MS21209C2020	3585-20CN2500
	2.5	---	---	TLC-20C-3125	MS21209C2025	3585-20CN3125
	3	---	---	TLC-20C-3750	MS21209C2030	3585-20CN3750
1-3/8-6	1	---	---	TLC-22C-1375	MS21209C2210	3585-22CN1375
	1.5	---	---	TLC-22C-2062	MS21209C2215	3585-22CN2062
	2	---	---	TLC-22C-2750	MS21209C2220	3585-22CN2750
	2.5	---	---	TLC-22C-3438	MS21209C2225	3585-22CN3438
	3	---	---	TLC-22C-4125	MS21209C2230	3585-22CN4125
1-1/2-6	1	---	---	TLC-24C-1500	MS21209C2410	3585-24CN1500
	1.5	---	---	TLC-24C-2250	MS21209C2415	3585-24CN2250
	2	---	---	TLC-24C-3000	MS21209C2420	3585-24CN3000
	2.5	---	---	TLC-24C-3750	MS21209C2425	3585-24CN3750
	3	---	---	TLC-24C-4500	MS21209C2430	3585-24CN4500

Unified Fine - Locking Series

Thread Size	Nominal Length (in Dia.)	Tangless		Tanged		
		CoilThread No.	NA/NAS No.	CoilThread No.	MA/MS No.	Heli-Coil No.
3-56	1	---	---	TLF-03C-0099	MS21209F0310	3591-03CN099
	1.5	---	---	TLF-03C-0148	MS21209F0315	3591-03CN148
	2	---	---	TLF-03C-0198	MS21209F0320	3591-03CN198
	2.5	---	---	TLF-03C-0248	MS21209F0325	3591-03CN248
	3	---	---	TLF-03C-0297	MS21209F0330	3591-03CN297
4-48	1	---	---	TLF-04C-0112	MS21209F0410	3591-04CN112
	1.5	---	---	TLF-04C-0168	MS21209F0415	3591-04CN168
	2	---	---	TLF-04C-0224	MS21209F0420	3591-04CN224
	2.5	---	---	TLF-04C-0280	MS21209F0425	3591-04CN280
	3	---	---	TLF-04C-0336	MS21209F0430	3591-04CN336
6-40	1	---	---	TLF-06C-0138	MS21209F0610	3591-06CN138
	1.5	---	---	TLF-06C-0207	MS21209F0615	3591-06CN207
	2	---	---	TLF-06C-0276	MS21209F0620	3591-06CN276
	2.5	---	---	TLF-06C-0345	MS21209F0625	3591-06CN345
	3	---	---	TLF-06C-0414	MS21209F0630	3591-06CN414
8-36	1	---	---	TLF-2C-0164	MS21209F0810	3591-2CN164
	1.5	---	---	TLF-2C-0246	MS21209F0815	3591-2CN246
	2	---	---	TLF-2C-0328	MS21209F0820	3591-2CN328
	2.5	---	---	TLF-2C-0410	MS21209F0825	3591-2CN410
	3	---	---	TLF-2C-0492	MS21209F0830	3591-2CN492

CoilThread Part Numbers & Cross References

Unified Fine - Locking Series

Thread Size	Nominal Length (in Dia.)	Tangless		Tanged		
		CoilThread No.	NA/NAS No.	CoilThread No.	MA/MS No.	Heli-Coil No.
10-32	1	2TLF-3C-0190	NAS1130-3L10	TLF-3C-0190	MS21209F1-10	3591-3CN190
	1.5	2TLF-3C-0285	NAS1130-3L15	TLF-3C-0285	MS21209F1-15	3591-3CN285
	2	2TLF-3C-0380	NAS1130-3L20	TLF-3C-0380	MS21209F1-20	3591-3CN380
	2.5	2TLF-3C-0475	NAS1130-3L25	TLF-3C-0475	MS21209F1-25	3591-3CN475
	3	2TLF-3C-0570	NAS1130-3L30	TLF-3C-0570	MS21209F1-30	3591-3CN570
1/4-28	1	2TLF-4C-0250	NAS1130-4FL10	TLF-4C-0250	MS21209F4-10	3591-4CN250
	1.5	2TLF-4C-0375	NAS1130-4FL15	TLF-4C-0375	MS21209F4-15	3591-4CN375
	2	2TLF-4C-0500	NAS1130-4FL20	TLF-4C-0500	MS21209F4-20	3591-4CN500
	2.5	2TLF-4C-0625	NAS1130-4FL25	TLF-4C-0625	MS21209F4-25	3591-4CN625
	3	2TLF-4C-0750	NAS1130-4FL30	TLF-4C-0750	MS21209F4-30	3591-4CN750
5/16-24	1	2TLF-5C-0312	NAS1130-5FL10	TLF-5C-0312	MS21209F5-10	3591-5CN312
	1.5	2TLF-5C-0469	NAS1130-5FL15	TLF-5C-0469	MS21209F5-15	3591-5CN469
	2	2TLF-5C-0625	NAS1130-5FL20	TLF-5C-0625	MS21209F5-20	3591-5CN625
	2.5	2TLF-5C-0781	NAS1130-5FL25	TLF-5C-0781	MS21209F5-25	3591-5CN781
	3	---	---	TLF-5C-0938	MS21209F5-30	3591-5CN938
3/8-24	1	2TLF-6C-0375	NAS1130-6FL10	TLF-6C-0375	MS21209F6-10	3591-6CN375
	1.5	2TLF-6C-0562	NAS1130-6FL15	TLF-6C-0562	MS21209F6-15	3591-6CN562
	2	2TLF-6C-0750	NAS1130-6FL20	TLF-6C-0750	MS21209F6-20	3591-6CN750
	2.5	---	---	TLF-6C-0938	MS21209F6-25	3591-6CN938
	3	---	---	TLF-6C-1125	MS21209F6-30	3591-6CN1125
7/16-20	1	2TLF-7C-0438	---	TLF-7C-0438	MS21209F7-10	3591-7CN438
	1.5	2TLF-7C-0656	---	TLF-7C-0656	MS21209F7-15	3591-7CN656
	2	2TLF-7C-0875	---	TLF-7C-0875	MS21209F7-20	3591-7CN875
	2.5	---	---	TLF-7C-1094	MS21209F7-25	3591-7CN1094
	3	---	---	TLF-7C-1312	MS21209F7-30	3591-7CN1312
1/2-20	1	2TLF-8C-0500	---	TLF-8C-0500	MS21209F8-10	3591-8CN500
	1.5	2TLF-8C-0750	---	TLF-8C-0750	MS21209F8-15	3591-8CN750
	2	2TLF-8C-1000	---	TLF-8C-1000	MS21209F8-20	3591-8CN1000
	2.5	---	---	TLF-8C-1250	MS21209F8-25	3591-8CN1250
	3	---	---	TLF-8C-1500	MS21209F8-30	3591-8CN1500
9/16-18	1	---	---	TLF-9C-0562	MS21209F9-10	3591-9CN562
	1.5	---	---	TLF-9C-0844	MS21209F9-15	3591-9CN844
	2	---	---	TLF-9C-1125	MS21209F9-20	3591-9CN1125
	2.5	---	---	TLF-9C-1406	MS21209F9-25	3591-9CN1406
	3	---	---	TLF-9C-1688	MS21209F9-30	3591-9CN1688
5/8-18	1	---	---	TLF-10C-0625	MS21209F1010	3591-10CN625
	1.5	---	---	TLF-10C-0938	MS21209F1015	3591-10CN938
	2	---	---	TLF-10C-1250	MS21209F1020	3591-10CN1250
	2.5	---	---	TLF-10C-1562	MS21209F1025	3591-10CN1562
	3	---	---	TLF-10C-1875	MS21209F1030	3591-10CN1875
3/4-16	1	---	---	TLF-12C-0750	MS21209F1210	3591-12CN750
	1.5	---	---	TLF-12C-1125	MS21209F1215	3591-12CN1125
	2	---	---	TLF-12C-1500	MS21209F1220	3591-12CN1500
	2.5	---	---	TLF-12C-1875	MS21209F1225	3591-12CN1875
	3	---	---	TLF-12C-2250	MS21209F1230	3591-12CN2250

CoilThread Part Numbers & Cross References

Unified Fine - Locking Series

Thread Size	Nominal Length (in Dia.)	Tangless		Tanged		
		CoilThread No.	NA/NAS No.	CoilThread No.	MA/MS No.	Heli-Coil No.
7/8-14	1	---	---	TLF-14C-0875	MS21209F1410	3591-14CN875
	1.5	---	---	TLF-14C-1312	MS21209F1415	3591-14CN1312
	2	---	---	TLF-14C-1750	MS21209F1420	3591-14CN1750
	2.5	---	---	TLF-14C-2188	MS21209F1425	3591-14CN2188
	3	---	---	TLF-14C-2625	MS21209F1430	3591-14CN2625
1-12	1	---	---	TLF-161C-1000	MS21209F1610	3591-161CN1000
	1.5	---	---	TLF-161C-1500	MS21209F1615	3591-161CN1500
	2	---	---	TLF-161C-2000	MS21209F1620	3591-161CN2000
	2.5	---	---	TLF-161C-2500	MS21209F1625	3591-161CN2500
	3	---	---	TLF-161C-3000	MS21209F1630	3591-161CN3000
1-1/8-12	1	---	---	TLF-18C-1125	MS21209F1810	3591-18CN1125
	1.5	---	---	TLF-18C-1688	MS21209F1815	3591-18CN1688
	2	---	---	TLF-18C-2250	MS21209F1820	3591-18CN2250
	2.5	---	---	TLF-18C-2812	MS21209F1825	3591-18CN2812
	3	---	---	TLF-18C-3375	MS21209F1830	3591-18CN3375
1-1/4-12	1	---	---	TLF-20C-1250	MS21209F2010	3591-20CN1250
	1.5	---	---	TLF-20C-1875	MS21209F2015	3591-20CN1875
	2	---	---	TLF-20C-2500	MS21209F2020	3591-20CN2500
	2.5	---	---	TLF-20C-3125	MS21209F2025	3591-20CN3125
	3	---	---	TLF-20C-3750	MS21209F2030	3591-20CN3750
1-3/8-12	1	---	---	TLF-22C-1375	MS21209F2210	3591-22CN1375
	1.5	---	---	TLF-22C-2062	MS21209F2215	3591-22CN2062
	2	---	---	TLF-22C-2750	MS21209F2220	3591-22CN2750
	2.5	---	---	TLF-22C-3438	MS21209F2225	3591-22CN3438
	3	---	---	TLF-22C-4125	MS21209F2230	3591-22CN4125
1-1/2-12	1	---	---	TLF-24C-1500	MS21209F2410	3591-24CN1500
	1.5	---	---	TLF-24C-2250	MS21209F2415	3591-24CN2250
	2	---	---	TLF-24C-3000	MS21209F2420	3591-24CN3000
	2.5	---	---	TLF-24C-3750	MS21209F2425	3591-24CN3750
	3	---	---	TLF-24C-4500	MS21209F2430	3591-24CN4500

Metric Coarse - Locking Series

Thread Size	Nominal Length (in Dia.)	Tangless		Tanged		
		CoilThread No.	NA/NAS No.	CoilThread No.	MA/MS No.	Heli-Coil No.
M2X0.4	1	2TLM-2X.4C-2	---	---	MA3329-140[1]	---
	1.5	2TLM-2X.4C-3	---	---	MA3329-190[1]	---
	2	2TLM-2X.4C-4	---	---	MA3329-240[1]	---
	2.5	---	---	---	MA3329-290	---
	3	---	---	---	MA3329-340	---
M2.2X0.45	1	---	---	TLM-2.2X.45C-2.2	MA3329-100	4184-2.2CN022
	1.5	---	---	TLM-2.2X.45C-3.3	MA3329-150	4184-2.2CN033
	2	---	---	TLM-2.2X.45C-4.4	MA3329-200	4184-2.2CN044
	2.5	---	---	TLM-2.2X.45C-5.5	MA3329-250	4184-2.2CN055
	3	---	---	TLM-2.2X.45C-6.6	MA3329-300	4184-2.2CN066

1. M2X0.4 Tangless **only**, MA equivalent.

CoilThread Part Numbers & Cross References

Metric Coarse - Locking Series

Thread Size	Nominal Length (in Dia.)	Tangless		Tanged		
		CoilThread No.	NA/NAS No.	CoilThread No.	MA/MS No.	Heli-Coil No.
M2.5X0.45	1	2TLM-2.5X.45C-2.5	NA0276M2AL10	TLM-2.5X.45C-2.5	MA3329-101	4184-2.5CN025
	1.5	2TLM-2.5X.45C-3.8	NA0276M2AL15	TLM-2.5X.45C-3.8	MA3329-151	4184-2.5CN038
	2	2TLM-2.5X.45C-5	NA0276M2AL20	TLM-2.5X.45C-5	MA3329-201	4184-2.5CN050
	2.5	2TLM-2.5X.45C-6.3	NA0276M2AL25	TLM-2.5X.45C-6.3	MA3329-251	4184-2.5CN063
	3	2TLM-2.5X.45C-7.5	NA0276M2AL30	TLM-2.5X.45C-7.5	MA3329-301	4184-2.5CN075
M3X0.5	1	2TLM-3X.5C-3	NA0276M3L10	TLM-3X.5C-3	MA3329-102	4184-3CN030
	1.5	2TLM-3X.5C-4.5	NA0276M3L15	TLM-3X.5C-4.5	MA3329-152	4184-3CN045
	2	2TLM-3X.5C-6	NA0276M3L20	TLM-3X.5C-6	MA3329-202	4184-3CN060
	2.5	2TLM-3X.5C-7.5	NA0276M3L25	TLM-3X.5C-7.5	MA3329-252	4184-3CN075
	3	2TLM-3X.5C-9	NA0276M3L30	TLM-3X.5C-9	MA3329-302	4184-3CN090
M3.5X0.6	1	---	---	TLM-3.5X.6C-3.5	MA3329-103	4184-3.5CN035
	1.5	---	---	TLM-3.5X.6C-5.3	MA3329-153	4184-3.5CN053
	2	---	---	TLM-3.5X.6C-7	MA3329-203	4184-3.5CN070
	2.5	---	---	TLM-3.5X.6C-8.8	MA3329-253	4184-3.5CN088
	3	---	---	TLM-3.5X.6C-10.5	MA3329-303	4184-3.5CN105
M4X0.7	1	2TLM-4X.7C-4	NA0276M4L10	TLM-4X.7C-4	MA3339-104	4184-4CN040
	1.5	2TLM-4X.7C-6	NA0276M4L15	TLM-4X.7C-6	MA3329-154	4184-4CN060
	2	2TLM-4X.7C-8	NA0276M4L20	TLM-4X.7C-8	MA3329-204	4184-4CN080
	2.5	2TLM-4X.7C-10	NA0276M4L25	TLM-4X.7C-10	MA3329-254	4184-4CN100
	3	2TLM-4X.7C-12	NA0276M4L30	TLM-4X.7C-12	MA3329-304	4184-4CN120
M5X0.8	1	2TLM-5X.8C-5	NA0276M5L10	TLM-5X.8C-5	MA3329-105	4184-5CN050
	1.5	2TLM-5X.8C-7.5	NA0276M5L15	TLM-5X.8C-7.5	MA3329-155	4184-5CN075
	2	2TLM-5X.8C-10	NA0276M5L20	TLM-5X.8C-10	MA3329-205	4184-5CN100
	2.5	2TLM-5X.8C-12.5	NA0276M5L25	TLM-5X.8C-12.5	MA3329-255	4184-5CN125
	3	2TLM-5X.8C-15	NA0276M5L30	TLM-5X.8C-15	MA3329-305	4184-5CN150
M6X1	1	2TLM-6X1C-6	NA0276M6L10	TLM-6X1C-6	MA3329-106	4184-6CN060
	1.5	2TLM-6X1C-9	NA0276M6L15	TLM-6X1C-9	MA3329-156	4184-6CN090
	2	2TLM-6X1C-12	NA0276M6L20	TLM-6X1C-12	MA3329-206	4184-6CN120
	2.5	2TLM-6X1C-15	NA0276M6L25	TLM-6X1C-15	MA3329-256	4184-6CN150
	3	2TLM-6X1C-18	NA0276M6L30	TLM-6X1C-18	MA3329-306	4184-6CN180
M7X1	1	---	---	TLM-7X1C-7	MA3329-107	4184-7CN070
	1.5	---	---	TLM-7X1C-10.5	MA3329-157	4184-7CN105
	2	---	---	TLM-7X1C-14	MA3329-207	4184-7CN140
	2.5	---	---	TLM-7X1C-17.5	MA3329-257	4184-7CN175
	3	---	---	TLM-7X1C-21	MA3329-307	4184-7CN210
M8X1.25	1	2TLM-8X1.25C-8	NA0276M8L10	TLM-8X1.25C-8	MA3329-109	4184-8CN080
	1.5	2TLM-8X1.25C-12	NA0276M8L15	TLM-8X1.25C-12	MA3329-159	4184-8CN120
	2	2TLM-8X1.25C-16	NA0276M8L20	TLM-8X1.25C-16	MA3329-209	4184-8CN160
	2.5	2TLM-8X1.25C-20	NA0276M8L25	TLM-8X1.25C-20	MA3329-259	4184-8CN200
	3	2TLM-8X1.25C-24	NA0276M8L30	TLM-8X1.25C-24	MA3329-309	4184-8CN240
M10X1.5	1	2TLM-10X1.5C-10	NA0276M10L10	TLM-10X1.5C-10	MA3329-111	4184-10CN100
	1.5	2TLM-10X1.5C-15	NA0276M10L15	TLM-10X1.5C-15	MA3329-161	4184-10CN150
	2	2TLM-10X1.5C-20	NA0276M10L20	TLM-10X1.5C-20	MA3329-211	4184-10CN200
	2.5	2TLM-10X1.5C-25	NA0276M10L25	TLM-10X1.5C-25	MA3329-261	4184-10CN250
	3	---	---	TLM-10X1.5C-30	MA3329-311	4184-10CN300
M12X1.75	1	2TLM-12X1.75C-12	NA0276M12L10	TLM-12X1.75C-12	MA3329-114	4184-12CN120
	1.5	2TLM-12X1.75C-18	NA0276M12L15	TLM-12X1.75C-18	MA3329-164	4184-12CN180
	2	2TLM-12X1.75C-24	NA0276M12L20	TLM-12X1.75C-24	MA3329-214	4184-12CN240
	2.5	---	---	TLM-12X1.75C-30	MA3329-264	4184-12CN300
	3	---	---	TLM-12X1.75C-36	MA3329-314	4184-12CN360

CoilThread Part Numbers & Cross References

Metric Coarse - Locking Series

Thread Size	Nominal Length (in Dia.)	Tangless		Tanged		
		CoilThread No.	NA/NAS No.	CoilThread No.	MA/MS No.	Heli-Coil No.
M14X2	1	---	---	TLM-14X2C-14	MA3329-116	4184-14CN140
	1.5	---	---	TLM-14X2C-21	MA3329-166	4184-14CN210
	2	---	---	TLM-14X2C-28	MA3329-216	4184-14CN280
	2.5	---	---	TLM-14X2C-35	MA3329-266	4184-14CN350
	3	---	---	TLM-14X2C-42	MA3329-316	4184-14CN420
M16X2	1	---	---	TLM-16X2C-16	MA3329-118	4184-16CN160
	1.5	---	---	TLM-16X2C-24	MA3329-168	4184-16CN240
	2	---	---	TLM-16X2C-32	MA3329-218	4184-16CN320
	2.5	---	---	TLM-16X2C-40	MA3329-268	4184-16CN400
	3	---	---	TLM-16X2C-48	MA3329-318	4184-16CN480
M18X2.5	1	---	---	TLM-18X2.5C-18	MA3329-121	4184-18CN180
	1.5	---	---	TLM-18X2.5C-27	MA3329-171	4184-18CN270
	2	---	---	TLM-18X2.5C-36	MA3329-221	4184-18CN360
	2.5	---	---	TLM-18X2.5C-45	MA3329-271	4184-18CN450
	3	---	---	TLM-18X2.5C-54	MA3329-321	4184-18CN540
M20X2.5	1	---	---	TLM-20X2.5C-20	MA3329-124	4184-20CN200
	1.5	---	---	TLM-20X2.5C-30	MA3329-174	4184-20CN300
	2	---	---	TLM-20X2.5C-40	MA3329-224	4184-20CN400
	2.5	---	---	TLM-20X2.5C-50	MA3329-274	4184-20CN500
	3	---	---	TLM-20X2.5C-60	MA3329-324	4184-20CN600
M22X2.5	1	---	---	TLM-22X2.5C-22	MA3329-127	4184-22CN220
	1.5	---	---	TLM-22X2.5C-33	MA3329-177	4184-22CN330
	2	---	---	TLM-22X2.5C-44	MA3329-227	4184-22CN440
	2.5	---	---	TLM-22X2.5C-55	MA3329-277	4184-22CN550
	3	---	---	TLM-22X2.5C-66	MA3329-327	4184-22CN660
M24X3	1	---	---	TLM-24X3C-24	MA3329-129	4184-24CN240
	1.5	---	---	TLM-24X3C-36	MA3329-179	4184-24CN360
	2	---	---	TLM-24X3C-48	MA3329-229	4184-24CN480
	2.5	---	---	TLM-24X3C-60	MA3329-279	4184-24CN600
	3	---	---	TLM-24X3C-72	MA3329-329	4184-24CN720
M27X3	1	---	---	TLM-27X3C-27	MA3329-131	4184-27CN270
	1.5	---	---	TLM-27X3C-40.5	MA3329-181	4184-27CN405
	2	---	---	TLM-27X3C-54	MA3329-231	4184-27CN540
	2.5	---	---	TLM-27X3C-67.5	MA3329-281	4184-27CN675
	3	---	---	TLM-27X3C-81	MA3329-331	4184-27CN810

Metric Fine - Locking Series

Thread Size	Nominal Length (in Dia.)	Tangless		Tanged		
		CoilThread No.	NA/NAS No.	CoilThread No.	MA/MS No.	Heli-Coil No.
M8X1	1	---	---	TLM-8X1C-8	MA3329-108	5255-8CN080
	1.5	---	---	TLM-8X1C-12	MA3329-158	5255-8CN120
	2	---	---	TLM-8X1C-16	MA3329-208	5255-8CN160
	2.5	---	---	TLM-8X1C-20	MA3329-258	5255-8CN200
	3	---	---	TLM-8X1C-24	MA3329-308	5255-8CN240

CoilThread Part Numbers & Cross References

Metric Fine - Locking Series

Thread Size	Nominal Length (in Dia.)	Tangless		Tanged		
		CoilThread No.	NA/NAS No.	CoilThread No.	MA/MS No.	Heli-Coil No.
M10X1	1	---	---	TLM-10X1C-10	MA3329-141	5255-10CN100
	1.5	---	---	TLM-10X1C-15	MA3329-191	5255-10CN150
	2	---	---	TLM-10X1C-20	MA3329-241	5255-10CN200
	2.5	---	---	TLM-10X1C-25	MA3329-291	5255-10CN250
	3	---	---	TLM-10X1C-30	MA3329-341	5255-10CN300
M10X1.25	1	---	---	TLM-10X1.25C-10	MA3329-110	5649-10CN100
	1.5	---	---	TLM-10X1.25C-15	MA3329-160	5649-10CN150
	2	---	---	TLM-10X1.25C-20	MA3329-210	5649-10CN200
	2.5	---	---	TLM-10X1.25C-25	MA3329-260	5649-10CN250
	3	---	---	TLM-10X1.25C-30	MA3329-310	5649-10CN300
M12X1.25	1	---	---	TLM-12X1.25C-12	MA3329-112	5649-12CN120
	1.5	---	---	TLM-12X1.25C-18	MA3329-162	5649-12CN180
	2	---	---	TLM-12X1.25C-24	MA3329-212	5649-12CN240
	2.5	---	---	TLM-12X1.25C-30	MA3329-262	5649-12CN300
	3	---	---	TLM-12X1.25C-36	MA3329-312	5649-12CN360
M12X1.5	1	---	---	TLM-12X1.5C-12	MA3329-113	5145-12CN120
	1.5	---	---	TLM-12X1.5C-18	MA3329-163	5145-12CN180
	2	---	---	TLM-12X1.5C-24	MA3329-213	5145-12CN240
	2.5	---	---	TLM-12X1.5C-30	MA3329-263	5145-12CN300
	3	---	---	TLM-12X1.5C-36	MA3329-313	5145-12CN360
M14X1.5	1	---	---	TLM-14X1.5C-14	MA3329-115	5145-14CN140
	1.5	---	---	TLM-14X1.5C-21	MA3329-165	5145-14CN210
	2	---	---	TLM-14X1.5C-28	MA3329-215	5145-14CN280
	2.5	---	---	TLM-14X1.5C-35	MA3329-265	5145-14CN350
	3	---	---	TLM-14X1.5C-42	MA3329-315	5145-14CN420
M16X1.5	1	---	---	TLM-16X1.5C-16	MA3329-117	5145-16CN160
	1.5	---	---	TLM-16X1.5C-24	MA3329-167	5145-16CN240
	2	---	---	TLM-16X1.5C-32	MA3329-217	5145-16CN320
	2.5	---	---	TLM-16X1.5C-40	MA3329-267	5145-16CN400
	3	---	---	TLM-16X1.5C-48	MA3329-317	5145-16CN480
M18X1.5	1	---	---	TLM-18X1.5C-18	MA3329-119	5145-18CN180
	1.5	---	---	TLM-18X1.5C-27	MA3329-169	5145-18CN270
	2	---	---	TLM-18X1.5C-36	MA3329-219	5145-18CN360
	2.5	---	---	TLM-18X1.5C-45	MA3329-269	5145-18CN450
	3	---	---	TLM-18X1.5C-54	MA3329-319	5145-18CN540
M18X2	1	---	---	TLM-18X2C-18	MA3329-120	5266-18CN180
	1.5	---	---	TLM-18X2C-27	MA3329-170	5266-18CN270
	2	---	---	TLM-18X2C-36	MA3329-220	5266-18CN360
	2.5	---	---	TLM-18X2C-45	MA3329-270	5266-18CN450
	3	---	---	TLM-18X2C-54	MA3329-320	5266-18CN540
M20X1.5	1	---	---	TLM-20X1.5C-20	MA3329-122	5145-20CN200
	1.5	---	---	TLM-20X1.5C-30	MA3329-172	5145-20CN300
	2	---	---	TLM-20X1.5C-40	MA3329-222	5145-20CN400
	2.5	---	---	TLM-20X1.5C-50	MA3329-272	5145-20CN500
	3	---	---	TLM-20X1.5C-60	MA3329-322	5145-20CN600
M20X2	1	---	---	TLM-20X2C-20	MA3329-123	5266-20CN200
	1.5	---	---	TLM-20X2C-30	MA3329-173	5266-20CN300
	2	---	---	TLM-20X2C-40	MA3329-223	5266-20CN400
	2.5	---	---	TLM-20X2C-50	MA3329-273	5266-20CN500
	3	---	---	TLM-20X2C-60	MA3329-323	5266-20CN600

CoilThread Part Numbers & Cross References

Metric Fine - Locking Series

Thread Size	Nominal Length (in Dia.)	Tangless		Tanged		
		CoilThread No.	NA/NAS No.	CoilThread No.	MA/MS No.	Heli-Coil No.
M22X1.5	1	---	---	TLM-22X1.5C-22	MA3329-125	5145-22CN220
	1.5	---	---	TLM-22X1.5C-33	MA3329-175	5145-22CN330
	2	---	---	TLM-22X1.5C-44	MA3329-225	5145-22CN440
	2.5	---	---	TLM-22X1.5C-55	MA3329-275	5145-22CN550
	3	---	---	TLM-22X1.5C-66	MA3329-325	5145-22CN660
M22X2	1	---	---	TLM-22X2C-22	MA3329-126	5266-22CN220
	1.5	---	---	TLM-22X2C-33	MA3329-176	5266-22CN330
	2	---	---	TLM-22X2C-44	MA3329-226	5266-22CN440
	2.5	---	---	TLM-22X2C-55	MA3329-276	5266-22CN550
	3	---	---	TLM-22X2C-66	MA3329-326	5266-22CN660
M24X2	1	---	---	TLM-24X2C-24	MA3329-128	5266-24CN240
	1.5	---	---	TLM-24X2C-36	MA3329-178	5266-24CN360
	2	---	---	TLM-24X2C-48	MA3329-228	5266-24CN480
	2.5	---	---	TLM-24X2C-60	MA3329-278	5266-24CN600
	3	---	---	TLM-24X2C-72	MA3329-328	5266-24CN720
M27X2	1	---	---	TLM-27X2C-27	MA3329-130	5266-27CN270
	1.5	---	---	TLM-27X2C-40.5	MA3329-180	5266-27CN405
	2	---	---	TLM-27X2C-54	MA3329-230	5266-27CN540
	2.5	---	---	TLM-27X2C-67.5	MA3329-280	5266-27CN675
	3	---	---	TLM-27X2C-81	MA3329-330	5266-27CN810
M30X2	1	---	---	TLM-30X2C-30	MA3329-132	5266-30CN030
	1.5	---	---	TLM-30X2C-45	MA3329-182	5266-30CN045
	2	---	---	TLM-30X2C-60	MA3329-232	5266-30CN060
	2.5	---	---	TLM-30X2C-75	MA3329-282	5266-30CN075
	3	---	---	TLM-30X2C-90	MA3329-332	5266-30CN090
M33X2	1	---	---	TLM-33X2C-33	MA3329-134	5266-33CN330
	1.5	---	---	TLM-33X2C-49.5	MA3329-184	5266-33CN495
	2	---	---	TLM-33X2C-66	MA3329-234	5266-33CN660
	2.5	---	---	TLM-33X2C-82.5	MA3329-284	5266-33CN825
	3	---	---	TLM-33X2C-99	MA3329-334	5266-33CN990
M36X2	1	---	---	TLM-36X2C-36	MA3329-136	5266-36CN036
	1.5	---	---	TLM-36X2C-54	MA3329-186	5266-36CN054
	2	---	---	TLM-36X2C-72	MA3329-236	5266-36CN072
	2.5	---	---	TLM-36X2C-90	MA3329-286	5266-36CN090
	3	---	---	TLM-36X2C-108	MA3329-336	5266-36CN108
M39X2	1	---	---	TLM-39X2C-39	MA3329-138	5266-39CN390
	1.5	---	---	TLM-39X2C-58.5	MA3329-188	5266-39CN585
	2	---	---	TLM-39X2C-78	MA3329-238	5266-39CN780
	2.5	---	---	TLM-39X2C-97.5	MA3329-288	5266-39CN970
	3	---	---	TLM-39X2C-117	MA3329-338	5266-39CN117
M36X3	1	---	---	TLM-36X3C-36	MA3329-137	5277-36CN360
	1.5	---	---	TLM-36X3C-54	MA3329-187	5277-36CN540
	2	---	---	TLM-36X3C-72	MA3329-237	5277-36CN720
	2.5	---	---	TLM-36X3C-90	MA3329-287	5277-36CN900
	3	---	---	TLM-36X3C-108	MA3329-337	5277-36CN108
M39X3	1	---	---	TLM-39X3C-39	MA3329-139	5277-39CN390
	1.5	---	---	TLM-39X3C-58.5	MA3329-189	5277-39CN585
	2	---	---	TLM-39X3C-78	MA3329-239	5277-39CN780
	2.5	---	---	TLM-39X3C-97.5	MA3329-289	5277-39CN975
	3	---	---	TLM-39X3C-117	MA3329-339	5277-39CN117

CoilThread Part Numbers & Cross References

Unified Coarse - Non-Locking Series

Thread Size	Nominal Length (in Dia.)	Tangless		Tanged		
		CoilThread No.	NA/NAS No.	CoilThread No.	MA/MS No.	Heli-Coil No.
1-64	1	2TNC-01C-0073	---	---	---	---
	1.5	2TNC-01C-0110	---	---	---	---
	2	2TNC-01C-0146	---	---	---	---
	2.5	---	---	---	---	---
	3	---	---	---	---	---
2-56	1	2TNC-02C-0086	NAS1130-02-10	TNC-02C-0086	MS122095	1185-02CN086
	1.5	2TNC-02C-0129	NAS1130-02-15	TNC-02C-0129	MS122135	1185-02CN129
	2	2TNC-02C-0172	NAS1130-02-20	TNC-02C-0172	MS122175	1185-02CN172
	2.5	2TNC-02C-0215	NAS1130-02-25	TNC-02C-0215	MS122215	1185-02CN215
	3	2TNC-02C-0258	NAS1130-02-30	TNC-02C-0258	MS122255	1185-02CN258
3-48	1	---	---	TNC-03C-0099	MS122115	1185-03CN099
	1.5	---	---	TNC-03C-0148	MS122155	1185-03CN148
	2	---	---	TNC-03C-0198	MS122195	1185-03CN198
	2.5	---	---	TNC-03C-0248	MS122235	1185-03CN248
	3	---	---	TNC-03C-0297	MS122275	1185-03CN297
4-40	1	2TNC-04C-0112	NAS1130-04-10	TNC-04C-0112	MS122076	1185-04CN112
	1.5	2TNC-04C-0168	NAS1130-04-15	TNC-04C-0168	MS122116	1185-04CN168
	2	2TNC-04C-0224	NAS1130-04-20	TNC-04C-0224	MS122156	1185-04CN224
	2.5	2TNC-04C-0280	NAS1130-04-25	TNC-04C-0280	MS122196	1185-04CN280
	3	2TNC-04C-0336	NAS1130-04-30	TNC-04C-0336	MS122236	1185-04CN336
5-40	1	---	---	TNC-05C-0125	MS122077	1185-05CN125
	1.5	---	---	TNC-05C-0188	MS122117	1185-05CN188
	2	---	---	TNC-05C-0250	MS122157	1185-05CN250
	2.5	---	---	TNC-05C-0312	MS122197	1185-05CN312
	3	---	---	TNC-05C-0375	MS122237	1185-05CN375
6-32	1	2TNC-06C-0138	NAS1130-06-10	TNC-06C-0138	MS122078	1185-06CN138
	1.5	2TNC-06C-0207	NAS1130-06-15	TNC-06C-0207	MS122118	1185-06CN207
	2	2TNC-06C-0276	NAS1130-06-20	TNC-06C-0276	MS122158	1185-06CN276
	2.5	2TNC-06C-0345	NAS1130-06-25	TNC-06C-0345	MS122198	1185-06CN345
	3	2TNC-06C-0414	NAS1130-06-30	TNC-06C-0414	MS122238	1185-06CN414
8-32	1	2TNC-2C-0164	NAS1130-08-10	TNC-2C-0164	MS122079	1185-2CN164
	1.5	2TNC-2C-0246	NAS1130-08-15	TNC-2C-0246	MS122119	1185-2CN246
	2	2TNC-2C-0328	NAS1130-08-20	TNC-2C-0328	MS122159	1185-2CN328
	2.5	2TNC-2C-0410	NAS1130-08-25	TNC-2C-0410	MS122199	1185-2CN410
	3	2TNC-2C-0492	NAS1130-08-30	TNC-2C-0492	MS122239	1185-2CN492
10-24	1	2TNC-3C-0190	NAS1130-3C-10	TNC-3C-0190	MS122080	1185-3CN190
	1.5	2TNC-3C-0285	NAS1130-3C-15	TNC-3C-0285	MS122120	1185-3CN285
	2	2TNC-3C-0380	NAS1130-3C-20	TNC-3C-0380	MS122160	1185-3CN380
	2.5	2TNC-3C-0475	NAS1130-3C-25	TNC-3C-0475	MS122200	1185-3CN475
	3	2TNC-3C-0570	NAS1130-3C-30	TNC-3C-0570	MS122240	1185-3CN570
12-24	1	---	---	TNC-1C-0216	---	1185-1CN216
	1.5	---	---	TNC-1C-0324	---	1185-1CN324
	2	---	---	TNC-1C-0432	---	1185-1CN432
	2.5	---	---	TNC-1C-0540	---	1185-1CN540
	3	---	---	TNC-1C-0648	---	1185-1CN648
1/4-20	1	2TNC-4C-0250	NAS1130-4-10	TNC-4C-0250	MS122081	1185-4CN250
	1.5	2TNC-4C-0375	NAS1130-4-15	TNC-4C-0375	MS122121	1185-4CN375
	2	2TNC-4C-0500	NAS1130-4-20	TNC-4C-0500	MS122161	1185-4CN500
	2.5	2TNC-4C-0625	NAS1130-4-25	TNC-4C-0625	MS122201	1185-4CN625
	3	2TNC-4C-0750	NAS1130-4-30	TNC-4C-0750	MS122241	1185-4CN750

CoilThread Part Numbers & Cross References

Unified Coarse - Non-Locking Series

Thread Size	Nominal Length (in Dia.)	Tangless		Tanged		
		CoilThread No.	NA/NAS No.	CoilThread No.	MA/MS No.	Heli-Coil No.
5/16-18	1	2TNC-5C-0312	NAS1130-5C-10	TNC-5C-0312	MS122082	1185-5CN312
	1.5	2TNC-5C-0469	NAS1130-5C-15	TNC-5C-0469	MS122122	1185-5CN469
	2	2TNC-5C-0625	NAS1130-5C-20	TNC-5C-0625	MS122162	1185-5CN625
	2.5	2TNC-5C-0781	NAS1130-5C-25	TNC-5C-0781	MS122202	1185-5CN781
	3	2TNC-5C-0938	NAS1130-5C-30	TNC-5C-0938	MS122242	1185-5CN938
3/8-16	1	2TNC-6C-0375	NAS1130-6C-10	TNC-6C-0375	MS122083	1185-6CN375
	1.5	2TNC-6C-0562	NAS1130-6C-15	TNC-6C-0562	MS122123	1185-6CN562
	2	2TNC-6C-0750	NAS1130-6C-20	TNC-6C-0750	MS122163	1185-6CN750
	2.5	2TNC-6C-0938	NAS1130-6C-25	TNC-6C-0938	MS122203	1185-6CN938
	3	---	---	TNC-6C-1125	MS122243	1185-6CN1125
7/16-14	1	2TNC-7C-0438	---	TNC-7C-0438	MS122084	1185-7CN438
	1.5	2TNC-7C-0656	---	TNC-7C-0656	MS122124	1185-7CN656
	2	2TNC-7C-0875	---	TNC-7C-0875	MS122164	1185-7CN875
	2.5	---	---	TNC-7C-1094	MS122204	1185-7CN1094
	3	---	---	TNC-7C-1312	MS122244	1185-7CN1312
1/2-13	1	2TNC-8C-0500	---	TNC-8C-0500	MS122085	1185-8CN500
	1.5	2TNC-8C-0750	---	TNC-8C-0750	MS122125	1185-8CN750
	2	2TNC-8C-1000	---	TNC-8C-1000	MS122165	1185-8CN1000
	2.5	---	---	TNC-8C-1250	MS122205	1185-8CN1250
	3	---	---	TNC-8C-1500	MS122245	1185-8CN1500
9/16-12	1	---	---	TNC-9C-0562	MS122086	1185-9CN562
	1.5	---	---	TNC-9C-0844	MS122126	1185-9CN844
	2	---	---	TNC-9C-1125	MS122166	1185-9CN1125
	2.5	---	---	TNC-9C-1406	MS122206	1185-9CN1406
	3	---	---	TNC-9C-1688	MS122246	1185-9CN1688
5/8-11	1	---	---	TNC-10C-0625	MS122087	1185-10CN625
	1.5	---	---	TNC-10C-0938	MS122127	1185-10CN938
	2	---	---	TNC-10C-1250	MS122167	1185-10CN1250
	2.5	---	---	TNC-10C-1562	MS122207	1185-10CN1562
	3	---	---	TNC-10C-1875	MS122247	1185-10CN1875
3/4-10	1	---	---	TNC-12C-0750	MS122088	1185-12CN750
	1.5	---	---	TNC-12C-1125	MS122128	1185-12CN1125
	2	---	---	TNC-12C-1500	MS122168	1185-12CN1500
	2.5	---	---	TNC-12C-1875	MS122208	1185-12CN1875
	3	---	---	TNC-12C-2250	MS122248	1185-12CN2250
7/8-9	1	---	---	TNC-14C-0875	MS122089	1185-14CN875
	1.5	---	---	TNC-14C-1312	MS122129	1185-14CN1312
	2	---	---	TNC-14C-1750	MS122169	1185-14CN1750
	2.5	---	---	TNC-14C-2188	MS122209	1185-14CN2188
	3	---	---	TNC-14C-2625	MS122249	1185-14CN2625
1-8	1	---	---	TNC-16C-1000	MS122090	1185-16CN1000
	1.5	---	---	TNC-16C-1500	MS122130	1185-16CN1500
	2	---	---	TNC-16C-2000	MS122170	1185-16CN2000
	2.5	---	---	TNC-16C-2500	MS122210	1185-16CN2500
	3	---	---	TNC-16C-3000	MS122250	1185-16CN3000

CoilThread Part Numbers & Cross References

Unified Coarse - Non-Locking Series

Thread Size	Nominal Length (in Dia.)	Tangless		Tanged		
		CoilThread No.	NA/NAS No.	CoilThread No.	MA/MS No.	Heli-Coil No.
1-1/8-7	1	---	---	TNC-18C-1125	MS122091	1185-18CN1125
	1.5	---	---	TNC-18C-1688	MS122131	1185-18CN1688
	2	---	---	TNC-18C-2250	MS122171	1185-18CN2250
	2.5	---	---	TNC-18C-2812	MS122211	1185-18CN2812
	3	---	---	TNC-18C-3375	MS122251	1185-18CN3375
1-1/4-7	1	---	---	TNC-20C-1250	MS122092	1185-20CN1250
	1.5	---	---	TNC-20C-1875	MS122132	1185-20CN1875
	2	---	---	TNC-20C-2500	MS122172	1185-20CN2500
	2.5	---	---	TNC-20C-3125	MS122212	1185-20CN3125
	3	---	---	TNC-20C-3750	MS122252	1185-20CN3750
1-3/8-6	1	---	---	TNC-22C-1375	MS122093	1185-22CN1375
	1.5	---	---	TNC-22C-2062	MS122133	1185-22CN2062
	2	---	---	TNC-22C-2750	MS122173	1185-22CN2750
	2.5	---	---	TNC-22C-3438	MS122213	1185-22CN3438
	3	---	---	TNC-22C-4125	MS122253	1185-22CN4125
1-1/2-6	1	---	---	TNC-24C-1500	MS122094	1185-24CN1500
	1.5	---	---	TNC-24C-2250	MS122134	1185-24CN2250
	2	---	---	TNC-24C-3000	MS122174	1185-24CN3000
	2.5	---	---	TNC-24C-3750	MS122214	1185-24CN3750
	3	---	---	TNC-24C-4500	MS122254	1185-24CN4500

Unified Fine - Non-Locking Series

Thread Size	Nominal Length (in Dia.)	Tangless		Tanged		
		CoilThread No.	NA/NAS No.	CoilThread No.	MA/MS No.	Heli-Coil No.
0-80	1	2TNF-00C-0060	---	---	---	---
	1.5	2TNF-00C-0090	---	---	---	---
	2	2TNF-00C-0120	---	---	---	---
	2.5	---	---	---	---	---
	3	---	---	---	---	---
3-56	1	---	---	TNF-03C-0099	MS124670	1191-03CN099
	1.5	---	---	TNF-03C-0148	MS124710	1191-03CN148
	2	---	---	TNF-03C-0198	MS124750	1191-03CN198
	2.5	---	---	TNF-03C-0248	MS124790	1191-03CN248
	3	---	---	TNF-03C-0297	MS124830	1191-03CN297
4-48	1	---	---	TNF-04C-0112	MS124671	1191-04CN112
	1.5	---	---	TNF-04C-0168	MS124711	1191-04CN168
	2	---	---	TNF-04C-0224	MS124751	1191-04CN224
	2.5	---	---	TNF-04C-0280	MS124791	1191-04CN280
	3	---	---	TNF-04C-0336	MS124831	1191-04CN336
6-40	1	---	---	TNF-06C-0138	MS124653	1191-06CN138
	1.5	---	---	TNF-06C-0207	MS124693	1191-06CN207
	2	---	---	TNF-06C-0276	MS124733	1191-06CN276
	2.5	---	---	TNF-06C-0345	MS124773	1191-06CN345
	3	---	---	TNF-06C-0414	MS124813	1191-06CN414

CoilThread Part Numbers & Cross References

Unified Fine - Non-Locking Series

Thread Size	Nominal Length (in Dia.)	Tangless		Tanged		
		CoilThread No.	NA/NAS No.	CoilThread No.	MA/MS No.	Heli-Coil No.
8-36	1	---	---	TNF-2C-0164	MS124654	1191-2CN164
	1.5	---	---	TNF-2C-0246	MS124694	1191-2CN246
	2	---	---	TNF-2C-0328	MS124734	1191-2CN328
	2.5	---	---	TNF-2C-0410	MS124774	1191-2CN410
	3	---	---	TNF-2C-0492	MS124814	1191-2CN492
10-32	1	2TNF-3C-0190	NAS1130-3-10	TNF-3C-0190	MS124655	1191-3CN190
	1.5	2TNF-3C-0285	NAS1130-3-15	TNF-3C-0285	MS124695	1191-3CN285
	2	2TNF-3C-0380	NAS1130-3-20	TNF-3C-0380	MS124735	1191-3CN380
	2.5	2TNF-3C-0475	NAS1130-3-25	TNF-3C-0475	MS124775	1191-3CN475
	3	2TNF-3C-0570	NAS1130-3-30	TNF-3C-0570	MS124815	1191-3CN570
1/4-28	1	2TNF-4C-0250	NAS1130-4F-10	TNF-4C-0250	MS124656	1191-4CN250
	1.5	2TNF-4C-0375	NAS1130-4F-15	TNF-4C-0375	MS124696	1191-4CN375
	2	2TNF-4C-0500	NAS1130-4F-20	TNF-4C-0500	MS124736	1191-4CN500
	2.5	2TNF-4C-0625	NAS1130-4F-25	TNF-4C-0625	MS124776	1191-4CN625
	3	2TNF-4C-0750	NAS1130-4F-30	TNF-4C-0750	MS124816	1191-4CN750
5/16-24	1	2TNF-5C-0312	NAS1130-5F-10	TNF-5C-0312	MS124657	1191-5CN312
	1.5	2TNF-5C-0469	NAS1130-5F-15	TNF-5C-0469	MS124697	1191-5CN469
	2	2TNF-5C-0625	NAS1130-5F-20	TNF-5C-0625	MS124737	1191-5CN625
	2.5	2TNF-5C-0781	NAS1130-5F-25	TNF-5C-0781	MS124777	1191-5CN781
	3	---	---	TNF-5C-0938	MS124817	1191-5CN938
3/8-24	1	2TNF-6C-0375	NAS1130-6F-10	TNF-6C-0375	MS124658	1191-6CN375
	1.5	2TNF-6C-0562	NAS1130-6F-15	TNF-6C-0562	MS124698	1191-6CN562
	2	2TNF-6C-0750	NAS1130-6F-20	TNF-6C-0750	MS124738	1191-6CN750
	2.5	---	---	TNF-6C-0938	MS124778	1191-6CN938
	3	---	---	TNF-6C-1125	MS124818	1191-6CN1125
7/16-20	1	2TNF-7C-0438	---	TNF-7C-0438	MS124659	1191-7CN438
	1.5	2TNF-7C-0656	---	TNF-7C-0656	MS124699	1191-7CN656
	2	2TNF-7C-0875	---	TNF-7C-0875	MS124739	1191-7CN875
	2.5	---	---	TNF-7C-1094	MS124779	1191-7CN1094
	3	---	---	TNF-7C-1312	MS124819	1191-7CN1312
1/2-20	1	2TNF-8C-0500	---	TNF-8C-0500	MS124660	1191-8CN500
	1.5	2TNF-8C-0750	---	TNF-8C-0750	MS124700	1191-8CN750
	2	2TNF-8C-1000	---	TNF-8C-1000	MS124740	1191-8CN1000
	2.5	---	---	TNF-8C-1250	MS124780	1191-8CN1250
	3	---	---	TNF-8C-1500	MS124820	1191-8CN1500
9/16-18	1	---	---	TNF-9C-0562	MS124661	1191-9CN562
	1.5	---	---	TNF-9C-0844	MS124701	1191-9CN844
	2	---	---	TNF-9C-1125	MS124741	1191-9CN1125
	2.5	---	---	TNF-9C-1406	MS124781	1191-9CN1406
	3	---	---	TNF-9C-1688	MS124821	1191-9CN1688
5/8-18	1	---	---	TNF-10C-0625	MS124662	1191-10CN625
	1.5	---	---	TNF-10C-0938	MS124702	1191-10CN938
	2	---	---	TNF-10C-1250	MS124742	1191-10CN1250
	2.5	---	---	TNF-10C-1562	MS124782	1191-10CN1562
	3	---	---	TNF-10C-1875	MS124822	1191-10CN1875

CoilThread Part Numbers & Cross References

Unified Fine - Non-Locking Series

Thread Size	Nominal Length (in Dia.)	Tangless		Tanged		
		CoilThread No.	NA/NAS No.	CoilThread No.	MA/MS No.	Heli-Coil No.
3/4-16	1	---	---	TNF-12C-0750	MS124663	1191-12CN750
	1.5	---	---	TNF-12C-1125	MS124703	1191-12CN1125
	2	---	---	TNF-12C-1500	MS124743	1191-12CN1500
	2.5	---	---	TNF-12C-1875	MS124783	1191-12CN1875
	3	---	---	TNF-12C-2250	MS124823	1191-12CN2250
7/8-14	1	---	---	TNF-14C-0875	MS124664	1191-14CN875
	1.5	---	---	TNF-14C-1312	MS124704	1191-14CN1312
	2	---	---	TNF-14C-1750	MS124744	1191-14CN1750
	2.5	---	---	TNF-14C-2188	MS124784	1191-14CN2188
	3	---	---	TNF-14C-2625	MS124824	1191-14CN2625
1-12	1	---	---	TNF-161C-1000	MS124651	1191-161CN1000
	1.5	---	---	TNF-161C-1500	MS124691	1191-161CN1500
	2	---	---	TNF-161C-2000	MS124731	1191-161CN2000
	2.5	---	---	TNF-161C-2500	MS124771	1191-161CN2500
	3	---	---	TNF-161C-3000	MS124811	1191-161CN3000
1-1/8-12	1	---	---	TNF-18C-1125	MS124666	1191-18CN1125
	1.5	---	---	TNF-18C-1688	MS124706	1191-18CN1688
	2	---	---	TNF-18C-2250	MS124746	1191-18CN2250
	2.5	---	---	TNF-18C-2812	MS124786	1191-18CN2812
	3	---	---	TNF-18C-3375	MS124826	1191-18CN3375
1-1/4-12	1	---	---	TNF-20C-1250	MS124667	1191-20CN1250
	1.5	---	---	TNF-20C-1875	MS124707	1191-20CN1875
	2	---	---	TNF-20C-2500	MS124747	1191-20CN2500
	2.5	---	---	TNF-20C-3125	MS124787	1191-20CN3125
	3	---	---	TNF-20C-3750	MS124827	1191-20CN3750
1-3/8-12	1	---	---	TNF-22C-1375	MS124668	1191-22CN1375
	1.5	---	---	TNF-22C-2062	MS124708	1191-22CN2062
	2	---	---	TNF-22C-2750	MS124748	1191-22CN2750
	2.5	---	---	TNF-22C-3438	MS124788	1191-22CN3438
	3	---	---	TNF-22C-4125	MS124828	1191-22CN4125
1-1/2-12	1	---	---	TNF-24C-1500	MS124669	1191-24CN1500
	1.5	---	---	TNF-24C-2250	MS124709	1191-24CN2250
	2	---	---	TNF-24C-3000	MS124749	1191-24CN3000
	2.5	---	---	TNF-24C-3750	MS124789	1191-24CN3750
	3	---	---	TNF-24C-4500	MS124829	1191-24CN4500

CoilThread Part Numbers & Cross References

Metric Coarse - Non-Locking Series

Thread Size	Nominal Length (in Dia.)	Tangless		Tanged		
		CoilThread No.	NA/NAS No.	CoilThread No.	MA/MS No.	Heli-Coil No.
M2X0.4	1	2TNM-2X.4C-2	---	TNM-2X.4C-2	MA3279-140	1084-2CN020
	1.5	2TNM-2X.4C-3	---	TNM-2X.4C-3	MA3279-190	1084-2CN030
	2	2TNM-2X.4C-4	---	TNM-2X.4C-4	MA3279-240	1084-2CN040
	2.5	---	---	TNM-2X.4C-5	MA3279-290	1084-2CN050
	3	---	---	TNM-2X.4C-6	MA3279-340	1084-2CN060
M2.2X0.45	1	---	---	TNM-2.2X.45C-2.2	MA3279-100	1084-2.2CN022
	1.5	---	---	TNM-2.2X.45C-3.3	MA3279-150	1084-2.2CN033
	2	---	---	TNM-2.2X.45C-4.4	MA3279-200	1084-2.2CN044
	2.5	---	---	TNM-2.2X.45C-5.5	MA3279-250	1084-2.2CN055
	3	---	---	TNM-2.2X.45C-6.6	MA3279-300	1084-2.2CN066
M2.5X0.45	1	2TNM-2.5X.45C-2.5	NA0276M2A-10	TNM-2.5X.45C-2.5	MA3279-101	1084-2.5CN025
	1.5	2TNM-2.5X.45C-3.8	NA0276M2A-15	TNM-2.5X.45C-3.8	MA3279-151	1084-2.5CN038
	2	2TNM-2.5X.45C-5	NA0276M2A-20	TNM-2.5X.45C-5	MA3279-201	1084-2.5CN050
	2.5	2TNM-2.5X.45C-6.3	NA0276M2A-25	TNM-2.5X.45C-6.3	MA3279-251	1084-2.5CN063
	3	2TNM-2.5X.45C-7.5	NA0276M2A-30	TNM-2.5X.45C-7.5	MA3279-301	1084-2.5CN075
M3X0.5	1	2TNM-3X.5C-3	NA0276M3-10	TNM-3X.5C-3	MA3279-102	1084-3CN030
	1.5	2TNM-3X.5C-4.5	NA0276M3-15	TNM-3X.5C-4.5	MA3279-152	1084-3CN045
	2	2TNM-3X.5C-6	NA0276M3-20	TNM-3X.5C-6	MA3279-202	1084-3CN060
	2.5	2TNM-3X.5C-7.5	NA0276M3-25	TNM-3X.5C-7.5	MA3279-252	1084-3CN075
	3	2TNM-3X.5C-9.0	NA0276M3-30	TNM-3X.5C-9	MA3279-302	1084-3CN090
M3.5X0.6	1	---	---	TNM-3.5X.6C-3.5	MA3279-103	1084-3.5CN035
	1.5	---	---	TNM-3.5X.6C-5.3	MA3279-153	1084-3.5CN053
	2	---	---	TNM-3.5X.6C-7	MA3279-203	1084-3.5CN070
	2.5	---	---	TNM-3.5X.6C-8.8	MA3279-253	1084-3.5CN088
	3	---	---	TNM-3.5X.6C-10.5	MA3279-303	1084-3.5CN105
M4X0.7	1	2TNM-4X.7C-4	NA0276M4-10	TNM-4X.7C-4	MA3279-104	1084-4CN040
	1.5	2TNM-4X.7C-6	NA0276M4-15	TNM-4X.7C-6	MA3279-154	1084-4CN060
	2	2TNM-4X.7C-8	NA0276M4-20	TNM-4X.7C-8	MA3279-204	1084-4CN080
	2.5	2TNM-4X.7C-10	NA0276M4-25	TNM-4X.7C-10	MA3279-254	1084-4CN100
	3	2TNM-4X.7C-12	NA0276M4-30	TNM-4X.7C-12	MA3279-304	1084-4CN120
M5X0.8	1	2TNM-5X.8C-5	NA0276M5-10	TNM-5X.8C-5	MA3279-105	1084-5CN050
	1.5	2TNM-5X.8C-7.5	NA0276M5-15	TNM-5X.8C-7.5	MA3279-155	1084-5CN075
	2	2TNM-5X.8C-10	NA0276M5-20	TNM-5X.8C-10	MA3279-205	1084-5CN100
	2.5	2TNM-5X.8C-12.5	NA0276M5-25	TNM-5X.8C-12.5	MA3279-255	1084-5CN125
	3	2TNM-5X.8C-15	NA0276M5-30	TNM-5X.8C-15	MA3279-305	1084-5CN150
M6X1	1	2TNM-6X1C-6	NA0276M6-10	TNM-6X1C-6	MA3279-106	1084-6CN060
	1.5	2TNM-6X1C-9	NA0276M6-15	TNM-6X1C-9	MA3279-156	1084-6CN090
	2	2TNM-6X1C-12	NA0276M6-20	TNM-6X1C-12	MA3279-206	1084-6CN120
	2.5	2TNM-6X1C-15	NA0276M6-25	TNM-6X1C-15	MA3279-256	1084-6CN150
	3	2TNM-6X1C-18	NA0276M6-30	TNM-6X1C-18	MA3279-306	1084-6CN180
M7X1	1	---	---	TNM-7X1C-7	MA3279-107	1084-7CN070
	1.5	---	---	TNM-7X1C-10.5	MA3279-157	1084-7CN105
	2	---	---	TNM-7X1C-14	MA3279-207	1084-7CN140
	2.5	---	---	TNM-7X1C-17.5	MA3279-257	1084-7CN175
	3	---	---	TNM-7X1C-21	MA3279-307	1084-7CN210

CoilThread Part Numbers & Cross References

Metric Coarse - Non-Locking Series

Thread Size	Nominal Length (in Dia.)	Tangless		Tanged		
		CoilThread No.	NA/NAS No.	CoilThread No.	MA/MS No.	Heli-Coil No.
M8X1.25	1	2TNM-8X1.25C-8	NA0276M8-10	TNM-8X1.25C-8	MA3279-109	1084-8CN080
	1.5	2TNM-8X1.25C-12	NA0276M8-15	TNM-8X1.25C-12	MA3279-159	1084-8CN120
	2	2TNM-8X1.25C-16	NA0276M8-20	TNM-8X1.25C-16	MA3279-209	1084-8CN160
	2.5	2TNM-8X1.25C-20	NA0276M8-25	TNM-8X1.25C-20	MA3279-259	1084-8CN200
	3	2TNM-8X1.25C-24	NA0276M8-30	TNM-8X1.25C-24	MA3279-309	1084-8CN240
M10X1.5	1	2TNM-10X1.5C-10	NA0276M10-10	TNM-10X1.5C-10	MA3279-111	1084-10CN100
	1.5	2TNM-10X1.5C-15	NA0276M10-15	TNM-10X1.5C-15	MA3279-161	1084-10CN150
	2	2TNM-10X1.5C-20	NA0276M10-20	TNM-10X1.5C-20	MA3279-211	1084-10CN200
	2.5	2TNM-10X1.5C-25	NA0276M10-25	TNM-10X1.5C-25	MA3279-261	1084-10CN250
	3	---	---	TNM-10X1.5C-30	MA3279-311	1084-10CN300
M12X1.75	1	2TNM-12X1.75C-12	NA0276M12-10	TNM-12X1.75C-12	MA3279-114	1084-12CN120
	1.5	2TNM-12X1.75C-18	NA0276M12-15	TNM-12X1.75C-18	MA3279-164	1084-12CN180
	2	2TNM-12X1.75C-24	NA0276M12-20	TNM-12X1.75C-24	MA3279-214	1084-12CN240
	2.5	---	---	TNM-12X1.75C-30	MA3279-264	1084-12CN300
	3	---	---	TNM-12X1.75C-36	MA3279-314	1084-12CN360
M14X2	1	---	---	TNM-14X2C-14	MA3279-116	1084-14CN140
	1.5	---	---	TNM-14X2C-21	MA3279-166	1084-14CN210
	2	---	---	TNM-14X2C-28	MA3279-216	1084-14CN280
	2.5	---	---	TNM-14X2C-35	MA3279-266	1084-14CN350
	3	---	---	TNM-14X2C-42	MA3279-316	1084-14CN420
M16X2	1	---	---	TNM-16X2C-16	MA3279-118	1084-16CN160
	1.5	---	---	TNM-16X2C-24	MA3279-168	1084-16CN240
	2	---	---	TNM-16X2C-32	MA3279-218	1084-16CN320
	2.5	---	---	TNM-16X2C-40	MA3279-268	1084-16CN400
	3	---	---	TNM-16X2C-48	MA3279-318	1084-16CN480
M18X2.5	1	---	---	TNM-18X2.5C-18	MA3279-121	1084-18CN180
	1.5	---	---	TNM-18X2.5C-27	MA3279-171	1084-18CN270
	2	---	---	TNM-18X2.5C-36	MA3279-221	1084-18CN360
	2.5	---	---	TNM-18X2.5C-45	MA3279-271	1084-18CN450
	3	---	---	TNM-18X2.5C-54	MA3279-321	1084-18CN540
M20X2.5	1	---	---	TNM-20X2.5C-20	MA3279-124	1084-20CN200
	1.5	---	---	TNM-20X2.5C-30	MA3279-174	1084-20CN300
	2	---	---	TNM-20X2.5C-40	MA3279-224	1084-20CN400
	2.5	---	---	TNM-20X2.5C-50	MA3279-274	1084-20CN500
	3	---	---	TNM-20X2.5C-60	MA3279-324	1084-20CN600
M22X2.5	1	---	---	TNM-22X2.5C-22	MA3279-127	1084-22CN220
	1.5	---	---	TNM-22X2.5C-33	MA3279-177	1084-22CN330
	2	---	---	TNM-22X2.5C-44	MA3279-227	1084-22CN440
	2.5	---	---	TNM-22X2.5C-55	MA3279-277	1084-22CN550
	3	---	---	TNM-22X2.5C-66	MA3279-327	1084-22CN660
M24X3	1	---	---	TNM-24X3C-24	MA3279-129	1084-24CN240
	1.5	---	---	TNM-24X3C-36	MA3279-179	1084-24CN360
	2	---	---	TNM-24X3C-48	MA3279-229	1084-24CN480
	2.5	---	---	TNM-24X3C-60	MA3279-279	1084-24CN600
	3	---	---	TNM-24X3C-72	MA3279-329	1084-24CN720

CoilThread Part Numbers & Cross References

Metric Coarse - Non-Locking Series

Thread Size	Nominal Length (in Dia.)	Tangless		Tanged		
		CoilThread No.	NA/NAS No.	CoilThread No.	MA/MS No.	Heli-Coil No.
M27X3	1	---	---	TNM-27X3C-27	MA3279-131	1084-27CN270
	1.5	---	---	TNM-27X3C-40.5	MA3279-181	1084-27CN405
	2	---	---	TNM-27X3C-54	MA3279-231	1084-27CN540
	2.5	---	---	TNM-27X3C-67.5	MA3279-281	1084-27CN675
	3	---	---	TNM-27X3C-81	MA3279-331	1084-27CN810

Metric Fine - Non-Locking Series

Thread Size	Nominal Length (in Dia.)	Tangless		Tanged		
		CoilThread No.	NA/NAS No.	CoilThread No.	MA/MS No.	Heli-Coil No.
M8X1	1	---	---	TNM-8X1C-8	MA3279-108	4255-8CN080
	1.5	---	---	TNM-8X1C-12	MA3279-158	4255-8CN120
	2	---	---	TNM-8X1C-16	MA3279-208	4255-8CN160
	2.5	---	---	TNM-8X1C-20	MA3279-258	4255-8CN200
	3	---	---	TNM-8X1C-24	MA3279-308	4255-8CN240
M10X1	1	---	---	TNM-10X1C-10	MA3279-141	4255-10CN100
	1.5	---	---	TNM-10X1C-15	MA3279-191	4255-10CN150
	2	---	---	TNM-10X1C-20	MA3279-241	4255-10CN200
	2.5	---	---	TNM-10X1C-25	MA3279-291	4255-10CN250
	3	---	---	TNM-10X1C-30	MA3279-341	4255-10CN300
M10X1.25	1	---	---	TNM-10X1.25C-10	MA3279-110	4649-10CN100
	1.5	---	---	TNM-10X1.25C-15	MA3279-160	4649-10CN150
	2	---	---	TNM-10X1.25C-20	MA3279-210	4649-10CN200
	2.5	---	---	TNM-10X1.25C-25	MA3279-260	4649-10CN250
	3	---	---	TNM-10X1.25C-30	MA3279-310	4649-10CN300
M12X1.25	1	---	---	TNM-12X1.25C-12	MA3279-112	4649-12CN120
	1.5	---	---	TNM-12X1.25C-18	MA3279-162	4649-12CN180
	2	---	---	TNM-12X1.25C-24	MA3279-212	4649-12CN240
	2.5	---	---	TNM-12X1.25C-30	MA3279-262	4649-12CN300
	3	---	---	TNM-12X1.25C-36	MA3279-312	4649-12CN360
M12X1.5	1	---	---	TNM-12X1.5C-12	MA3279-113	3745-12CN120
	1.5	---	---	TNM-12X1.5C-18	MA3279-163	3745-12CN180
	2	---	---	TNM-12X1.5C-24	MA3279-213	3745-12CN240
	2.5	---	---	TNM-12X1.5C-30	MA3279-263	3745-12CN300
	3	---	---	TNM-12X1.5C-36	MA3279-313	3745-12CN360
M14X1.5	1	---	---	TNM-14X1.5C-14	MA3279-115	3745-14CN140
	1.5	---	---	TNM-14X1.5C-21	MA3279-165	3745-14CN210
	2	---	---	TNM-14X1.5C-28	MA3279-215	3745-14CN280
	2.5	---	---	TNM-14X1.5C-35	MA3279-265	3745-14CN350
	3	---	---	TNM-14X1.5C-42	MA3279-315	3745-14CN420
M16X1.5	1	---	---	TNM-16X1.5C-16	MA3279-117	3745-16CN160
	1.5	---	---	TNM-16X1.5C-24	MA3279-167	3745-16CN240
	2	---	---	TNM-16X1.5C-32	MA3279-217	3745-16CN320
	2.5	---	---	TNM-16X1.5C-40	MA3279-267	3745-16CN400
	3	---	---	TNM-16X1.5C-48	MA3279-317	3745-16CN480

CoilThread Part Numbers & Cross References

Metric Fine - Non-Locking Series

Thread Size	Nominal Length (in Dia.)	Tangless		Tanged		
		CoilThread No.	NA/NAS No.	CoilThread No.	MA/MS Specs	Heli-Coil No.
M18X1.5	1	---	---	TNM-18X1.5C-18	MA3279-119	3745-18CN180
	1.5	---	---	TNM-18X1.5C-27	MA3279-169	3745-18CN270
	2	---	---	TNM-18X1.5C-36	MA3279-219	3745-18CN360
	2.5	---	---	TNM-18X1.5C-45	MA3279-269	3745-18CN450
	3	---	---	TNM-18X1.5C-54	MA3279-319	3745-18CN540
M18X2	1	---	---	TNM-18X2C-18	MA3279-120	4266-18CN180
	1.5	---	---	TNM-18X2C-27	MA3279-170	4266-18CN270
	2	---	---	TNM-18X2C-36	MA3279-220	4266-18CN360
	2.5	---	---	TNM-18X2C-45	MA3279-270	4266-18CN450
	3	---	---	TNM-18X2C-54	MA3279-320	4266-18CN540
M20X1.5	1	---	---	TNM-20X1.5C-20	MA3279-122	3745-20CN200
	1.5	---	---	TNM-20X1.5C-30	MA3279-172	3745-20CN300
	2	---	---	TNM-20X1.5C-40	MA3279-222	3745-20CN400
	2.5	---	---	TNM-20X1.5C-50	MA3279-272	3745-20CN500
	3	---	---	TNM-20X1.5C-60	MA3279-322	3745-20CN600
M20X2	1	---	---	TNM-20X2C-20	MA3279-123	4266-20CN200
	1.5	---	---	TNM-20X2C-30	MA3279-173	4266-20CN300
	2	---	---	TNM-20X2C-40	MA3279-223	4266-20CN400
	2.5	---	---	TNM-20X2C-50	MA3279-273	4266-20CN500
	3	---	---	TNM-20X2C-60	MA3279-323	4266-20CN600
M22X1.5	1	---	---	TNM-22X1.5C-22	MA3279-125	3745-22CN220
	1.5	---	---	TNM-22X1.5C-33	MA3279-175	3745-22CN330
	2	---	---	TNM-22X1.5C-44	MA3279-225	3745-22CN440
	2.5	---	---	TNM-22X1.5C-55	MA3279-275	3745-22CN550
	3	---	---	TNM-22X1.5C-66	MA3279-325	3745-22CN660
M22X2	1	---	---	TNM-22X2C-22	MA3279-126	4266-22CN220
	1.5	---	---	TNM-22X2C-33	MA3279-176	4266-22CN330
	2	---	---	TNM-22X2C-44	MA3279-226	4266-22CN440
	2.5	---	---	TNM-22X2C-55	MA3279-276	4266-22CN550
	3	---	---	TNM-22X2C-66	MA3279-326	4266-22CN660
M24X2	1	---	---	TNM-24X2C-24	MA3279-128	4266-24CN240
	1.5	---	---	TNM-24X2C-36	MA3279-178	4266-24CN360
	2	---	---	TNM-24X2C-48	MA3279-228	4266-24CN480
	2.5	---	---	TNM-24X2C-60	MA3279-278	4266-24CN600
	3	---	---	TNM-24X2C-72	MA3279-328	4266-24CN720
M27X2	1	---	---	TNM-27X2C-27	MA3279-130	4266-27CN270
	1.5	---	---	TNM-27X2C-40.5	MA3279-180	4266-27CN405
	2	---	---	TNM-27X2C-54	MA3279-230	4266-27CN540
	2.5	---	---	TNM-27X2C-67.5	MA3279-280	4266-27CN675
	3	---	---	TNM-27X2C-81	MA3279-330	4266-27CN810
M30X2	1	---	---	TNM-30X2C-30	MA3279-132	4266-33CN330
	1.5	---	---	TNM-30X2C-45	MA3279-182	4266-33CN495
	2	---	---	TNM-30X2C-60	MA3279-232	4266-33CN660
	2.5	---	---	TNM-30X2C-75	MA3279-282	4266-33CN825
	3	---	---	TNM-30X2C-90	MA3279-332	4266-33CN990

CoilThread Part Numbers & Cross References

Metric Fine - Non-Locking Series

Thread Size	Nominal Length (in Dia.)	Tangless		Tanged		
		CoilThread No.	NA/NAS No.	CoilThread No.	MA/MS No.	Heli-Coil No.
M33X2	1	---	---	TNM-33X2C-33	MA3279-134	4277-33CN330
	1.5	---	---	TNM-33X2C-49.5	MA3279-184	4277-33CN495
	2	---	---	TNM-33X2C-66	MA3279-234	4277-33CN660
	2.5	---	---	TNM-33X2C-82.5	MA3279-284	4277-33CN825
	3	---	---	TNM-33X2C-99	MA3279-334	4277-33CN990
M39X2	1	---	---	TNM-39X2C-39	MA3279-138	4266-39CN390
	1.5	---	---	TNM-39X2C-58.5	MA3279-188	4266-39CN585
	2	---	---	TNM-39X2C-78	MA3279-238	4266-39CN780
	2.5	---	---	TNM-39X2C-97.5	MA3279-288	4266-39CN975
	3	---	---	TNM-39X2C-117	MA3279-338	4266-39CN117
M36X3	1	---	---	TNM-36X3C-36	MA3279-137	4277-36CN360
	1.5	---	---	TNM-36X3C-54	MA3279-187	4277-36CN540
	2	---	---	TNM-36X3C-72	MA3279-237	4277-36CN720
	2.5	---	---	TNM-36X3C-90	MA3279-287	4277-36CN900
	3	---	---	TNM-36X3C-108	MA3279-337	4277-36CN108
M39X3	1	---	---	TNM-39X3C-39	MA3279-139	4277-39CN390
	1.5	---	---	TNM-39X3C-58.5	MA3279-189	4277-39CN585
	2	---	---	TNM-39X3C-78	MA3279-239	4277-39CN780
	2.5	---	---	TNM-39X3C-97.5	MA3279-289	4277-39CN975
	3	---	---	TNM-39X3C-117	MA3279-339	4277-39CN117

CoilThread STI Taps

KATO CoilThread STI (Screw Thread Insert) Taps are designed specifically to create internal threads that will accommodate a KATO CoilThread insert. CoilThread STI Taps can be used in a range of materials including aluminum, magnesium, steel, plastics, and other free machining materials. KATO Taps are manufactured from High Speed Steel for durability and prolonged tooling life.

KATO offers four tap styles for various applications:

Standard Regular Finishing Plug (4-Thread Chamfer) - Easy starting for through-holes and blind holes.

Standard Regular Finishing Plug

Standard Regular Finishing Bottoming (2-Thread Chamfer) - Ideal for blind holes which are drilled to the minimum depth, and for applications that require threads to be close to the bottom of the blind hole.

Standard Regular Finishing Bottoming

Spiral Pointed Plug (4-Thread Chamfer) - Free-cutting for use in long through-holes and in blind holes with chip clearance.

Spiral Pointed Plug

Spiral Flute Bottoming (2-Thread Chamfer) - Designed to pull chips out of deep or blind holes in soft materials.

Spiral Flute Bottoming

Features and Benefits

- KATO STI Taps can be used for both Tangless and tanged CoilThread inserts.
- Available in 3B and 2B (Unified) or 4H and 5H (Metric) Class of Fit.
- Full range of Unified and Metric thread sizes available.
- Lower cost than similar taps from competitors.

CoilThread STI Taps - Dimensions

Thread Size	Tap Dimensions					Number of Flutes		
	Length Overall A	Length of Thread B	Length of Square C	Diameter of Shank D	Size of Square	Finishing Plug & Bottoming	Spiral Point Plug	Spiral Flute Bottoming
Unified Coarse								
1-64	1.88	0.56	0.17	0.14	0.11	3	2	2
2-56	1.88	0.56	0.19	0.14	0.11	3	2	2
3-48	1.94	0.63	0.19	0.14	0.11	3	2	2
4-40	2.00	0.69	0.19	0.14	0.11	3	2	2
5-40	2.13	0.75	0.25	0.17	0.13	3	2	3
6-32	2.38	0.88	0.25	0.19	0.15	3	2	3
8-32	2.38	0.94	0.28	0.22	0.17	3	2	3
10-24	2.50	1.00	0.31	0.26	0.19	3	2	3
12-24	2.72	1.13	0.38	0.32	0.24	3	2	3
1/4-20	2.72	1.13	0.38	0.32	0.24	3	2	3
5/16-18	2.94	1.25	0.44	0.38	0.29	4	3	3
3/8-16	3.38	1.66	0.44	0.37	0.28	4	3	3
7/16-14	3.59	1.66	0.50	0.43	0.32	4	3	4
1/2-13	3.81	1.81	0.56	0.48	0.36	4	3	4
9/16-12	4.03	1.81	0.63	0.54	0.41	4	--	--
5/8-11	4.25	2.00	0.69	0.59	0.44	4	--	--
3/4-10	4.69	2.22	0.75	0.70	0.52	4	--	--
7/8-9	5.13	2.50	0.81	0.80	0.60	4	--	--
1-8	5.75	2.56	1.00	1.02	0.77	4	--	--
1-1/8-7	6.06	3.00	1.17	1.11	0.83	4	--	--
1-1/4-7	6.38	3.00	1.13	1.23	0.93	4	--	--
1-3/8-6	6.69	3.19	1.13	1.31	0.98	4	--	--
1-1/2-6	7.00	3.19	1.25	1.43	1.07	6	--	--
Unified Fine								
0-80	1.70	0.38	0.23	0.14	0.11	2	---	---
3-56	1.94	0.63	0.19	0.14	0.11	3	2	2
4-48	2.00	0.69	0.19	0.14	0.11	3	2	2
6-40	2.13	0.75	0.25	0.17	0.13	3	2	3
8-36	2.38	0.94	0.28	0.22	0.17	3	2	3
10-32	2.50	1.00	0.31	0.26	0.19	3	2	3
1/4-28	2.72	1.13	0.38	0.32	0.24	3	2	3
5/16-24	2.94	1.25	0.44	0.38	0.29	4	3	3
3/8-24	3.16	1.44	0.81	0.32	0.29	4	3	3
7/16-20	3.38	1.66	0.44	0.37	0.28	4	3	3
1/2-20	3.59	1.66	0.50	0.43	0.32	4	3	4
9/16-18	3.81	1.81	0.56	0.48	0.36	4	--	--
5/8-18	4.03	1.81	0.63	0.54	0.41	4	--	--
3/4-16	4.47	2.00	0.69	0.65	0.49	4	--	--
7/8-14	5.13	2.50	0.81	0.80	0.60	4	--	--
1-12	5.44	2.56	0.88	0.90	0.67	4	--	--
1-1/8-12	5.75	2.56	1.00	1.02	0.77	4	--	--
1-1/4-12	6.06	3.00	1.06	1.11	0.83	6	--	--
1-3/8-12	6.38	3.00	1.13	1.23	0.93	6	--	--
1-1/2-12	6.69	3.19	1.13	1.31	0.98	6	--	--

Standard Regular Finishing Plug:
Easy starting for through-holes and blind holes.

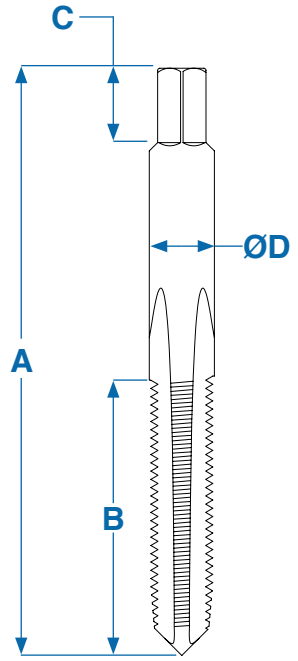

Standard Regular Finishing Bottoming:
Ideal for blind holes which are drilled to the minimum depth.

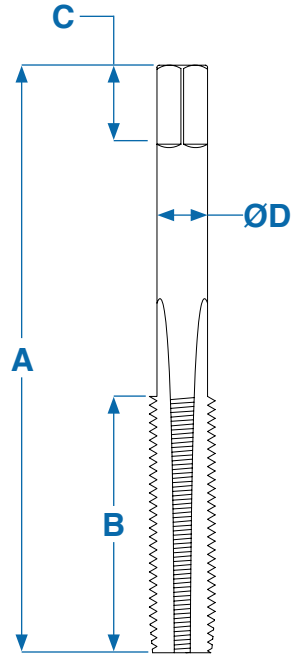

1. All dimensions are in inches.
2. All dimensions are for reference only.

CoilThread STI Taps - Dimensions

Spiral Pointed Plug:
Free-cutting for use in long through-holes and in blind holes with chip clearance.

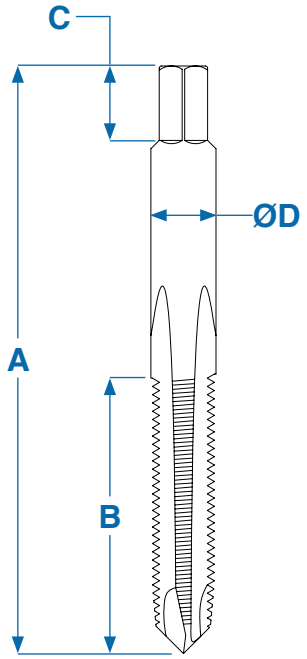

Spiral Flute Bottoming:
Designed to pull chips out of deep or blind holes in soft materials.

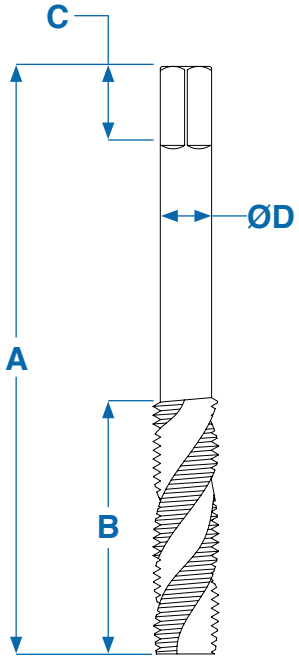

Thread Size	Tap Dimensions					Number of Flutes		
	Length Overall A	Length of Thread B	Length of Square C	Diameter of Shank D	Size of Square	Finishing Plug & Bottoming	Spiral Point Plug	Spiral Flute Bottoming
Metric Coarse								
M2x0.4	46.04	12.70	4.77	3.580	2.80	3	2	2
M2.2X0.45	47.62	14.29	4.76	3.580	2.790	3	2	2
M2.5X0.45	49.21	15.88	4.76	3.580	2.790	3	2	2
M3X0.5	50.80	17.46	4.76	3.580	2.790	3	2	2
M3.5X0.6	53.98	19.05	6.35	4.270	3.330	3	2	3
M4X0.7	60.32	22.22	6.35	4.930	3.860	3	2	3
M5X0.8	63.50	25.40	7.94	6.480	4.850	3	2	3
M6X1	69.06	28.58	9.52	8.080	6.040	4	2	3
M7X1	74.61	31.75	11.11	9.680	7.260	4	3	3
M8X1.25	74.61	31.75	11.11	9.680	7.260	4	3	3
M10X1.5	85.72	42.07	11.11	9.320	6.980	4	3	3
M12X1.75	91.28	42.07	12.70	10.900	8.180	4	3	4
M14X2	102.39	46.04	15.88	13.770	10.310	4	3	--
M16X2	107.95	50.80	17.46	14.990	11.230	4	3	--
M18X2.5	119.06	56.36	19.05	17.700	13.280	4	--	--
M20X2.5	124.62	56.36	19.05	19.300	14.480	4	--	--
M22X2.5	130.18	63.50	20.64	20.320	15.240	4	--	--
M24X3	138.11	65.09	22.22	22.760	17.070	4	--	--
M27X3	146.05	65.09	25.40	25.980	19.460	4	--	--
Metric Fine								
M8X1	74.61	31.75	11.11	9.680	7.260	4	3	3
M10X1	80.71	36.51	10.32	8.200	6.150	4	3	3
M10X1.25	85.72	42.07	11.11	9.320	6.980	4	3	3
M12X1.25	91.28	42.07	12.70	10.900	8.180	4	3	4
M12X1.5	91.28	42.07	12.70	10.900	8.180	4	3	4
M14X1.5	96.84	46.04	14.26	12.190	9.140	4	3	4
M16X1.5	107.95	50.80	17.46	14.990	11.230	4	3	--
M18X1.5	113.51	50.80	17.46	16.560	12.420	4	--	--
M20X1.5	119.06	56.36	19.05	17.700	13.280	4	--	--
M22X1.5	130.18	63.50	20.64	20.320	15.240	4	--	--
M18X2	113.51	50.80	17.46	16.560	12.420	4	--	--
M20X2	124.62	56.36	19.05	19.300	14.480	4	--	--
M22X2	130.18	63.50	20.64	20.320	15.240	4	--	--
M24X2	130.18	63.50	22.22	22.760	17.070	4	--	--
M27X2	138.11	65.09	25.40	25.930	19.460	4	--	--
M30X2	146.05	65.09	26.99	28.140	21.110	6	--	--
M33X2	153.99	76.20	28.58	31.320	23.500	6	--	--
M39X2	177.80	80.96	31.75	36.320	27.230	6	--	--
M36X3	169.86	80.96	28.58	33.150	24.870	6	--	--
M39X3	177.80	80.96	31.75	36.200	27.230	6	--	--

1. All dimensions are in millimeters.
2. All dimensions are for reference only.

CoilThread STI Taps - Part Numbers

Example of a KATO CoilThread STI Tap part number:

CT C - 02 SRP - H1

Tool Type:
CT - CoilThread Tap (STI)

Thread Designation:
- **C** - Unified Coarse
- **F** - Unified Fine
- **M** - Metric Sizes

Size Designation

Style / Type:
- **SRP** - Standard Regular Finishing Plug
- **SRB** - Standard Regular Finishing Bottoming
- **SPP** - Spiral Point Plug
- **SFB** - Spiral Flute Bottoming

Class of Fit:
See notes on the next page

Thread Size	Standard Regular Finishing				Spiral Pointed		Spiral Flute	
	Plug		Bottoming		Plug		Bottoming	
	3B	2B	3B	2B	3B	2B	3B	2B
Unified Coarse								
1-64	CTC-01SRP-H1	CTC-01SRP-H2	CTC-01SRB-H1	CTC-01SRB-H2	CTC-01SPP-H1	CTC-01SPP-H2	CTC-01SFB-H1	CTC-01SFB-H2
2-56	CTC-02SRP-H1	CTC-02SRP-H2	CTC-02SRB-H1	CTC-02SRB-H2	CTC-02SPP-H1	CTC-02SPP-H2	CTC-02SFB-H1	CTC-02SFB-H2
3-48	CTC-03SRP-H1	CTC-03SRP-H2	CTC-03SRB-H1	CTC-03SRB-H2	CTC-03SPP-H1	CTC-03SPP-H2	CTC-03SFB-H1	CTC-03SFB-H2
4-40	CTC-04SRP-H1	CTC-04SRP-H2	CTC-04SRB-H1	CTC-04SRB-H2	CTC-04SPP-H1	CTC-04SPP-H2	CTC-04SFB-H1	CTC-04SFB-H2
5-40	CTC-05SRP-H1	CTC-05SRP-H2	CTC-05SRB-H1	CTC-05SRB-H2	CTC-05SPP-H1	CTC-05SPP-H2	CTC-05SFB-H1	CTC-05SFB-H2
6-32	CTC-06SRP-H2	CTC-06SRP-H3	CTC-06SRB-H2	CTC-06SRB-H3	CTC-06SPP-H2	CTC-06SPP-H3	CTC-06SFB-H2	CTC-06SFB-H3
8-32	CTC-2SRP-H2	CTC-2SRP-H3	CTC-2SRB-H2	CTC-2SRB-H3	CTC-2SPP-H2	CTC-2SPP-H3	CTC-2SFB-H2	CTC-2SFB-H3
10-24	CTC-3SRP-H2	CTC-3SRP-H3	CTC-3SRB-H2	CTC-3SRB-H3	CTC-3SPP-H2	CTC-3SPP-H3	CTC-3SFB-H2	CTC-3SFB-H3
12-24	CTC-1SRP-H2	CTC-1SRP-H3	CTC-1SRB-H2	CTC-1SRB-H3	CTC-1SPP-H2	CTC-1SPP-H3	CTC-1SFB-H2	CTC-1SFB-H3
1/4-20	CTC-4SRP-H2	CTC-4SRP-H3	CTC-4SRB-H2	CTC-4SRB-H3	CTC-4SPP-H2	CTC-4SPP-H3	CTC-4SFB-H2	CTC-4SFB-H3
5/16-18	CTC-5SRP-H3	CTC-5SRP-H4	CTC-5SRB-H3	CTC-5SRB-H4	CTC-5SPP-H3	CTC-5SPP-H4	CTC-5SFB-H3	CTC-5SFB-H4
3/8-16	CTC-6SRP-H3	CTC-6SRP-H4	CTC-6SRB-H3	CTC-6SRB-H4	CTC-6SPP-H3	CTC-6SPP-H4	CTC-6SFB-H3	CTC-6SFB-H4
7/16-14	CTC-7SRP-H3	CTC-7SRP-H4	CTC-7SRB-H3	CTC-7SRB-H4	CTC-7SPP-H3	CTC-7SPP-H4	CTC-7SFB-H3	CTC-7SFB-H4
1/2-13	CTC-8SRP-H3	CTC-8SRP-H4	CTC-8SRB-H3	CTC-8SRB-H4	CTC-8SPP-H3	CTC-8SPP-H4	CTC-8SFB-H3	CTC-8SFB-H4
9/16-12	CTC-9SRP-H3	CTC-9SRP-H4	CTC-9SRB-H3	CTC-9SRB-H4	---	---	---	---
5/8-11	CTC-10SRP-H3	CTC-10SRP-H4	CTC-10SRB-H3	CTC-10SRB-H4	---	---	---	---
3/4-10	CTC-12SRP-H3	CTC-12SRP-H5	CTC-12SRB-H3	CTC-12SRB-H5	---	---	---	---
7/8-9	CTC-14SRP-H3	CTC-14SRP-H5	CTC-14SRB-H3	CTC-14SRB-H5	---	---	---	---
1-8	CTC-16SRP-H4	CTC-16SRP-H6	CTC-16SRB-H4	CTC-16SRB-H6	---	---	---	---
1-1/8-7	CTC-18SRP-H4	CTC-18SRP-H6	CTC-18SRB-H4	CTC-18SRB-H6	---	---	---	---
1-1/4-7	CTC-20SRP-H4	CTC-20SRP-H6	CTC-20SRB-H4	CTC-20SRB-H6	---	---	---	---
1-3/8-6	CTC-22SRP-H6	CTC-22SRP-H8	CTC-22SRB-H6	CTC-22SRB-H8	---	---	---	---
1-1/2-6	CTC-24SRP-H6	CTC-24SRP-H8	CTC-24SRB-H6	CTC-24SRB-H8	---	---	---	---
Unified Fine								
0-80	CTF-00SRP-H1	CTF-00SRP-H2	CTF-00SRB-H1	CTF-00SRB-H2	---	---	---	---
3-56	CTF-03SRP-H1	CTF-03SRP-H2	CTF-03SRB-H1	CTF-03SRB-H2	CTF-03SPP-H1	CTF-03SPP-H2	CTF-03SFB-H1	CTF-03SFB-H2
4-48	CTF-04SRP-H1	CTF-04SRP-H2	CTF-04SRB-H1	CTF-04SRB-H2	CTF-04SPP-H1	CTF-04SPP-H2	CTF-04SFB-H1	CTF-04SFB-H2
6-40	CTF-06SRP-H1	CTF-06SRP-H2	CTF-06SRB-H1	CTF-06SRB-H2	CTF-06SPP-H1	CTF-06SPP-H2	CTF-06SFB-H1	CTF-06SFB-H2
8-36	CTF-2SRP-H1	CTF-2SRP-H2	CTF-2SRB-H1	CTF-2SRB-H2	CTF-2SPP-H1	CTF-2SPP-H2	CTF-2SFB-H1	CTF-2SFB-H2
10-32	CTF-3SRP-H2	CTF-3SRP-H3	CTF-3SRB-H2	CTF-3SRB-H3	CTF-3SPP-H2	CTF-3SPP-H3	CTF-3SFB-H2	CTF-3SFB-H3
1/4-28	CTF-4SRP-H2	CTF-4SRP-H3	CTF-4SRB-H2	CTF-4SRB-H3	CTF-4SPP-H2	CTF-4SPP-H3	CTF-4SFB-H2	CTF-4SFB-H3
5/16-24	CTF-5SRP-H2	CTF-5SRP-H3	CTF-5SRB-H2	CTF-5SRB-H3	CTF-5SPP-H2	CTF-5SPP-H3	CTF-5SFB-H2	CTF-5SFB-H3
3/8-24	CTF-6SRP-H2	CTF-6SRP-H3	CTF-6SRB-H2	CTF-6SRB-H3	CTF-6SPP-H2	CTF-6SPP-H3	CTF-6SFB-H2	CTF-6SFB-H3
7/16-20	CTF-7SRP-H3	CTF-7SRP-H4	CTF-7SRB-H3	CTF-7SRB-H4	CTF-7SPP-H3	CTF-7SPP-H4	CTF-7SFB-H3	CTF-7SFB-H4
1/2-20	CTF-8SRP-H3	CTF-8SRP-H4	CTF-8SRB-H3	CTF-8SRB-H4	CTF-8SPP-H3	CTF-8SPP-H4	CTF-8SFB-H3	CTF-8SFB-H4
9/16-18	CTF-9SRP-H3	CTF-9SRP-H4	CTF-9SRB-H3	CTF-9SRB-H4	---	---	---	---
5/8-18	CTF-10SRP-H3	CTF-10SRP-H4	CTF-10SRB-H3	CTF-10SRB-H4	---	---	---	---
3/4-16	CTF-12SRP-H3	CTF-12SRP-H4	CTF-12SRB-H3	CTF-12SRB-H4	---	---	---	---
7/8-14	CTF-14SRP-H3	CTF-14SRP-H4	CTF-14SRB-H3	CTF-14SRB-H4	---	---	---	---
1-12	CTF-16SRP-H4	CTF-16SRP-H6	CTF-16SRB-H4	CTF-16SRB-H6	---	---	---	---
1-1/8-12	CTF-18SRP-H4	CTF-18SRP-H6	CTF-18SRB-H4	CTF-18SRB-H6	---	---	---	---
1-1/4-12	CTF-20SRP-H4	CTF-20SRP-H6	CTF-20SRB-H4	CTF-20SRB-H6	---	---	---	---
1-3/8-12	CTF-22SRP-H6	CTF-22SRP-H8	CTF-22SRB-H6	CTF-22SRB-H8	---	---	---	---
1-1/2-12	CTF-24SRP-H6	CTF-24SRP-H8	CTF-24SRB-H6	CTF-24SRB-H8	---	---	---	---

CoilThread STI Taps - Part Numbers

Thread Size	Standard Regular Finishing			
	Plug		Bottoming	
	4H	5H	4H	5H
Metric Coarse				
M2X0.4	CTM-2X.4SRP-4H	CTM-2X.4SRP-5H	CTM-2X.4SRB-4H	CTM-2X.4SRB-5H
M2.2X0.45	CTM-2.2X.45SRP-4H	CTM-2.2X.45SRP-5H	CTM-2.2X.45SRB-4H	CTM-2.2X.45SRB-5H
M2.5X0.45	CTM-2.5X.45SRP-4H	CTM-2.5X.45SRP-5H	CTM-2.5X.45SRB-4H	CTM-2.5X.45SRB-5H
M3X0.5	CTM-3X.5SRP-4H	CTM-3X.5SRP-5H	CTM-3X.5SRB-4H	CTM-3X.5SRB-5H
M3.5X0.6	CTM-3.5X.6SRP-4H	CTM-3.5X.6SRP-5H	CTM-3.5X.6SRB-4H	CTM-3.5X.6SRB-5H
M4X0.7	CTM-4X.7SRP-4H	CTM-4X.7SRP-5H	CTM-4X.7SRB-4H	CTM-4X.7SRB-5H
M5X0.8	CTM-5X.8SRP-4H	CTM-5X.8SRP-5H	CTM-5X.8SRB-4H	CTM-5X.8SRB-5H
M6X1	CTM-6X1SRP-4H	CTM-6X1SRP-5H	CTM-6X1SRB-4H	CTM-6X1SRB-5H
M7X1	CTM-7X1SRP-4H	CTM-7X1SRP-5H	CTM-7X1SRB-4H	CTM-7X1SRB -5H
M8X1.25	CTM-8X1.25SRP-4H	CTM-8X1.25SRP-5H	CTM-8X1.25SRB-4H	CTM-8X1.25SRB-5H
M10X1.5	CTM-10X1.5SRP-4H	CTM-10X1.5SRP-5H	CTM-10X1.5SRB-4H	CTM-10X1.5SRB-5H
M12X1.75	CTM-12X1.75SRP-4H	CTM-12X1.75SRP-5H	CTM-12X1.75SRB-4H	CTM-12X1.75SRB-5H
M14X2	CTM-14X2SRP-4H	CTM-14X2SRP-5H	CTM-14X2SRB-4H	CTM-14X2SRB-5H
M16X2	CTM-16X2SRP-4H	CTM-16X2SRP-5H	CTM-16X2SRB-4H	CTM-16X2SRB-5H
M18X2.5	CTM-18X2.5SRP-4H	CTM-18X2.5SRP-5H	CTM-18X2.5SRB-4H	CTM-18X2.5SRB-5H
M20X2.5	CTM-20X2.5SRP-4H	CTM-20X2.5SRP-5H	CTM-20X2.5SRB-4H	CTM-20X2.5SRB-5H
M22X2.5	CTM-22X2.5SRP-4H	CTM-22X2.5SRP-5H	CTM-22X2.5SRB-4H	CTM-22X2.5SRB-5H
M24X3	CTM-24X3SRP-4H	CTM-24X3SRP-5H	CTM-24X3SRB-4H	CTM-24X3SRB-5H
M27X3	CTM-27X3SRP-4H	CTM-27X3SRP-5H	CTM-27X3SRB-4H	CTM-27X3SRB-5H
Metric Fine				
M8X1	CTM-8X1SRP-4H	CTM-8X1SRP-5H	CTM-8X1SRB-4H	CTM-8X1SRB-5H
M10X1	CTM-10X1SRP-4H	CTM-10X1SRP-5H	CTM-10X1SRB-4H	CTM-10X1SRB-5H
M10X1.25	CTM-10X1.25SRP-4H	CTM-10X1.25SRP-5H	CTM-10X1.25SRB-4H	CTM-10X1.25SRB-5H
M12X1.25	CTM-12X1.25SRP-4H	CTM-12X1.25SRP-5H	CTM-12X1.25SRB-4H	CTM-12X1.25SRB-5H
M12X1.5	CTM-12X1.5SRP-4H	CTM-12X1.5SRP-5H	CTM-12X1.5SRB-4H	CTM-12X1.5SRB-5H
M14X1.5	CTM-14X1.5SRP-4H	CTM-14X1.5SRP-5H	CTM-14X1.5SRB-4H	CTM-14X1.5SRB-5H
M16X1.5	CTM-16X1.5SRP-4H	CTM-16X1.5SRP-5H	CTM-16X1.5SRB-4H	CTM-16X1.5SRB-5H
M18X1.5	CTM-18X1.5SRP-4H	CTM-18X1.5SRP-5H	CTM-18X1.5SRB-4H	CTM-18X1.5SRB-5H
M20X1.5	CTM-20X1.5SRP-4H	CTM-20X1.5SRP-5H	CTM-20X1.5SRB-4H	CTM-20X1.5SRB-5H
M22X1.5	CTM-22X1.5SRP-4H	CTM-22X1.5SRP-5H	CTM-22X1.5SRB-4H	CTM-22X1.5SRB-5H
M18X2	CTM-18X2SRP-4H	CTM-18X2SRP-5H	CTM-18X2SRB-4H	CTM-18X2SRB-5H
M20X2	CTM-20X2SRP-4H	CTM-20X2SRP-5H	CTM-20X2SRB-4H	CTM-20X2SRB-5H
M22X2	CTM-22X2SRP-4H	CTM-22X2SRP-5H	CTM-22X2SRB-4H	CTM-22X2SRB-5H
M24X2	CTM-24X2SRP-4H	CTM-24X2SRP-5H	CTM-24X2SRB-4H	CTM-24X2SRB-5H
M27X2	CTM-27X2SRP-4H	CTM-27X2SRP-5H	CTM-27X2SRB-4H	CTM-27X2SRB-5H
M30X2	CTM-30X2SRP-4H	CTM-30X2SRP-5H	CTM-30X2SRB-4H	CTM-30X2SRB-5H
M33X2	CTM-33X2SRP-4H	CTM-33X2SRP-5H	CTM-33X2SRB-4H	CTM-33X2SRB-5H
M39X2	CTM-39X2SRP-4H	CTM-39X2SRP-5H	CTM-39X2SRB-4H	CTM-39X2SRB-5H
M36X3	CTM-36X3SRP-4H	CTM-36X3SRP-5H	CTM-36X3SRB-4H	CTM-36X3SRB-5H
M39X3	CTM-39X3SRP-4H	CTM-39X3SRP-5H	CTM-39X3SRB-4H	CTM-39X3SRB-5H

1. The “H” limit indicates the tolerance range above the basic pitch diameter. Each “H” number is equal to 0.0005 inch above the basic pitch diameter.
2. The Class of Fit specifies the pitch diameter tolerance of the tapped hole, with class 3B (Unified) and 4H (Metric) being the tighter range usually specified in military/aerospace applications. Class 2B (Unified) and 5H (Metric) taps provide a broader tolerance range or looser fit, and are normally specified in commercial/industrial applications.
3. **The class of fit of the installed insert is controlled by the class of fit of the tapped hole.**

CoilThread STI Taps - Part Numbers

Thread Size	Spiral Pointed Plug		Spiral Flute Bottoming	
	4H	5H	4H	5H
Metric Coarse				
M2X0.4	CTM-2X.4SPP-4H	CTM-2X.4SPP-5H	CTM-2X.4SFB-4H	CTM-2X.4SFB-5H
M2.2X0.45	CTM-2.2X.45SPP-4H	CTM-2.2X.45SPP-5H	CTM-2.2X.45SFB-4H	CTM-2.2X.45SFB-5H
M2.5X0.45	CTM-2.5X.45SPP-4H	CTM-2.5X.45SPP-5H	CTM-2.5X.45SFB-4H	CTM-2.5X.45SFB-5H
M3X0.5	CTM-3X.5SPP-4H	CTM-3X.5SPP-5H	CTM-3X.5SFB-4H	CTM-3X.5SFB-5H
M3.5X0.6	CTM-3.5X.6SPP-4H	CTM-3.5X.6SPP-5H	CTM-3.5X.6SFB-4H	CTM-3.5X.6SFB-5H
M4X0.7	CTM-4X.7SPP-4H	CTM-4X.7SPP-5H	CTM-4X.7SFB-4H	CTM-4X.7SFB-5H
M5X0.8	CTM-5X.8SPP-4H	CTM-5X.8SPP-5H	CTM-5X.8SFB-4H	CTM-5X.8SFB-5H
M6X1	CTM-6X1SPP-4H	CTM-6X1SPP-5H	CTM-6X1SFB-4H	CTM-6X1SFB-5H
M7X1	CTM-7X1SPP-4H	CTM-7X1SPP-5H	CTM-7X1SFB-4H	CTM-7X1SFB -5H
M8X1.25	CTM-8X1.25SPP-4H	CTM-8X1.25SPP-5H	CTM-8X1.25SFB-4H	CTM-8X1.25SFB-5H
M10X1.5	CTM-10X1.5SPP-4H	CTM-10X1.5SPP-5H	CTM-10X1.5SFB-4H	CTM-10X1.5SFB-5H
M12X1.75	CTM-12X1.75SPP-4H	CTM-12X1.75SPP-5H	CTM-12X1.75SFB-4H	CTM-12X1.75SFB-5H
Metric Fine				
M8X1	CTM-8X1SPP-4H	CTM-8X1SPP-5H	CTM-8X1SFB-4H	CTM-8X1SFB-5H
M10X1	CTM-10X1SPP-4H	CTM-10X1SPP-5H	CTM-10X1SFB-4H	CTM-10X1SFB-5H
M10X1.25	CTM-10X1.25SPP-4H	CTM-10X1.25SPP-5H	CTM-10X1.25SFB-4H	CTM-10X1.25SFB-5H
M12X1.25	CTM-12X1.25SPP-4H	CTM-12X1.25SPP-5H	CTM-12X1.25SFB-4H	CTM-12X1.25SFB-5H
M12X1.5	CTM-12X1.5SPP-4H	CTM-12X1.5SPP-5H	CTM-12X1.5SFB-4H	CTM-12X1.5SFB-5H

CoilThread STI Taps - Cross References

KATO Part Number	Heli-Coil Part Number	KATO Part Number	Heli-Coil Part Number	KATO Part Number	Heli-Coil Part Number	KATO Part Number	Heli-Coil Part Number
Standard Regular Finishing Plug				Standard Regular Finishing Bottoming			
3B		2B		3B		2B	
Unified Coarse							
CTC-01SRP-H1	01CPB	CTC-01SRP-H2	01CPA	CTC-01SRB-H1	01CBB	CTC-01SRB-H2	01CBA
CTC-02SRP-H1	02CPB	CTC-02SRP-H2	02CPA	CTC-02SRB-H1	02CBB	CTC-02SRB-H2	02CBA
CTC-03SRP-H1	03CPB	CTC-03SRP-H2	03CPA	CTC-03SRB-H1	03CBB	CTC-03SRB-H2	03CBA
CTC-04SRP-H1	04CPB	CTC-04SRP-H2	04CPA	CTC-04SRB-H1	04CBB	CTC-04SRB-H2	04CBA
CTC-05SRP-H1	05CPB	CTC-05SRP-H2	05CPA	CTC-05SRB-H1	05CBB	CTC-05SRB-H2	05CBA
CTC-06SRP-H2	06CPB	CTC-06SRP-H3	06CPA	CTC-06SRB-H2	06CBB	CTC-06SRB-H3	06CBA
CTC-2SRP-H2	2CPB	CTC-2SRP-H3	2CPA	CTC-2SRB-H2	2CBB	CTC-2SRB-H3	2CBA
CTC-3SRP-H2	3CPB	CTC-3SRP-H3	3CPA	CTC-3SRB-H2	3CBB	CTC-3SRB-H3	3CBA
CTC-1SRP-H2	1CPB	CTC-1SRP-H3	1CPA	CTC-1SRB-H2	1CBB	CTC-1SRB-H3	1CBA
CTC-4SRP-H2	4CPB	CTC-4SRP-H3	4CPA	CTC-4SRB-H2	4CBB	CTC-4SRB-H3	4CBA
CTC-5SRP-H3	5CPB	CTC-5SRP-H4	5CPA	CTC-5SRB-H3	5CBB	CTC-5SRB-H4	5CBA
CTC-6SRP-H3	6CPB	CTC-6SRP-H4	6CPA	CTC-6SRB-H3	6CBB	CTC-6SRB-H4	6CBA
CTC-7SRP-H3	7CPB	CTC-7SRP-H4	7CPA	CTC-7SRB-H3	7CBB	CTC-7SRB-H4	7CBA
CTC-8SRP-H3	8CPB	CTC-8SRP-H4	8CPA	CTC-8SRB-H3	8CBB	CTC-8SRB-H4	8CBA
CTC-9SRP-H3	187-9	CTC-9SRP-H4	38187-9	CTC-9SRB-H3	4187-9	CTC-9SRB-H4	43187-9
CTC-10SRP-H3	8187-10	CTC-10SRP-H4	18187-10	CTC-10SRB-H3	10187-10	CTC-10SRB-H4	20187-10
CTC-12SRP-H3	8187-12	CTC-12SRP-H5	18187-12	CTC-12SRB-H3	10187-12	CTC-12SRB-H5	20187-12
CTC-14SRP-H3	8187-14	CTC-14SRP-H5	18187-14	CTC-14SRB-H3	10187-14	CTC-14SRB-H5	20187-14
CTC-16SRP-H4	8187-16	CTC-16SRP-H6	18187-16	CTC-16SRB-H4	10187-16	CTC-16SRB-H6	20187-16
CTC-18SRP-H4	8187-18	CTC-18SRP-H6	18187-18	CTC-18SRB-H4	10187-18	CTC-18SRB-H6	20187-18
CTC-20SRP-H4	8187-20	CTC-20SRP-H6	18187-20	CTC-20SRB-H4	10187-20	CTC-20SRB-H6	20187-20
CTC-22SRP-H6	8187-22	CTC-22SRP-H8	18187-22	CTC-22SRB-H6	10187-22	CTC-22SRB-H8	20187-22
CTC-24SRP-H6	8187-24	CTC-24SRP-H8	18187-24	CTC-24SRB-H6	10187-24	CTC-24SRB-H8	20187-24
Unified Fine							
CTF-00SRP-H1	---	CTF-00SRP-H2	---	CTF-00SRB-H1	---	CTF-00SRB-H2	---
CTF-03SRP-H1	03FPB	CTF-03SRP-H2	03FPA	CTF-03SRB-H1	03FBB	CTF-03SRB-H2	03FBA
CTF-04SRP-H1	04FPB	CTF-04SRP-H2	04FPA	CTF-04SRB-H1	04FBB	CTF-04SRB-H2	04FBA
CTF-06SRP-H1	06FPB	CTF-06SRP-H2	06FPA	CTF-06SRB-H1	06FBB	CTF-06SRB-H2	06FBA
CTF-2SRP-H1	2FPB	CTF-2SRP-H2	2FPA	CTF-2SRB-H1	2FBB	CTF-2SRB-H2	2FBA
CTF-3SRP-H2	3FPB	CTF-3SRP-H3	3FPA	CTF-3SRB-H2	3FBB	CTF-3SRB-H3	3FBA
CTF-4SRP-H2	4FPB	CTF-4SRP-H3	4FPA	CTF-4SRB-H2	4FBB	CTF-4SRB-H3	4FBA
CTF-5SRP-H2	5FPB	CTF-5SRP-H3	5FPA	CTF-5SRB-H2	5FBB	CTF-5SRB-H3	5FBA
CTF-6SRP-H2	6FPB	CTF-6SRP-H3	6FPA	CTF-6SRB-H2	6FBB	CTF-6SRB-H3	6FBA
CTF-7SRP-H3	7FPB	CTF-7SRP-H4	7FPA	CTF-7SRB-H3	7FBB	CTF-7SRB-H4	7FBA
CTF-8SRP-H3	8FPB	CTF-8SRP-H4	8FPA	CTF-8SRB-H3	8FBB	CTF-8SRB-H4	8FBA
CTF-9SRP-H3	38193-9	CTF-9SRP-H4	18193-9	CTF-9SRB-H3	43193-9	CTF-9SRB-H4	20193-9
CTF-10SRP-H3	8193-10	CTF-10SRP-H4	18193-10	CTF-10SRB-H3	10193-10	CTF-10SRB-H4	20193-10
CTF-12SRP-H3	8193-12	CTF-12SRP-H4	18193-12	CTF-12SRB-H3	10193-12	CTF-12SRB-H4	20193-12
CTF-14SRP-H3	8193-14	CTF-14SRP-H4	18193-14	CTF-14SRB-H3	10193-14	CTF-14SRB-H4	20193-14
CTF-16SRP-H4	8193-16	CTF-16SRP-H6	18193-16	CTF-16SRB-H4	10193-16	CTF-16SRB-H6	20193-16
CTF-18SRP-H4	8193-18	CTF-18SRP-H6	18193-18	CTF-18SRB-H4	10193-18	CTF-18SRB-H6	20193-18
CTF-20SRP-H4	8193-20	CTF-20SRP-H6	18193-20	CTF-20SRB-H4	10193-20	CTF-20SRB-H6	20193-20
CTF-22SRP-H6	8193-22	CTF-22SRP-H8	18193-22	CTF-22SRB-H6	10193-22	CTF-22SRB-H8	20193-22
CTF-24SRP-H6	8193-24	CTF-24SRP-H8	18193-24	CTF-24SRB-H6	10193-24	CTF-24SRB-H8	20193-24

CoilThread STI Taps - Cross References

KATO Part Number	Heli-Coil Part Number	KATO Part Number	Heli-Coil Part Number	KATO Part Number	Heli-Coil Part Number	KATO Part Number	Heli-Coil Part Number
Spiral Point Plug				Spiral Flute Bottoming			
3B		2B		3B		2B	
Unified Coarse							
CTC-01SPP-H1	01CSB	CTC-01SPP-H2	01CSA	CTC-01SFB-H1	5905-01	CTC-01SFB-H2	6905-01
CTC-02SPP-H1	02CSB	CTC-02SPP-H2	02CSA	CTC-02SFB-H1	5905-02	CTC-02SFB-H2	6905-02
CTC-03SPP-H1	03CSB	CTC-03SPP-H2	03CSA	CTC-03SFB-H1	5905-03	CTC-03SFB-H2	6905-03
CTC-04SPP-H1	04CSB	CTC-04SPP-H2	04CSA	CTC-04SFB-H1	5905-04	CTC-04SFB-H2	6905-04
CTC-05SPP-H1	05CSB	CTC-05SPP-H2	05CSA	CTC-05SFB-H1	5905-05	CTC-05SFB-H2	6905-05
CTC-06SPP-H2	06CSB	CTC-06SPP-H3	06CSA	CTC-06SFB-H2	5905-06	CTC-06SFB-H3	6905-06
CTC-2SPP-H2	2CSB	CTC-2SPP-H3	2CSA	CTC-2SFB-H2	5905-2	CTC-2SFB-H3	6905-2
CTC-3SPP-H2	3CSB	CTC-3SPP-H3	3CSA	CTC-3SFB-H2	5905-3	CTC-3SFB-H3	6905-3
CTC-1SPP-H2	1CSB	CTC-1SPP-H3	1CSA	CTC-1SFB-H2	5905-1	CTC-1SFB-H3	6905-1
CTC-4SPP-H2	4CSB	CTC-4SPP-H3	4CSA	CTC-4SFB-H2	5905-4	CTC-4SFB-H3	6905-4
CTC-5SPP-H3	5CSB	CTC-5SPP-H4	5CSA	CTC-5SFB-H3	5905-5	CTC-5SFB-H4	6905-5
CTC-6SPP-H3	6CSB	CTC-6SPP-H4	6CSA	CTC-6SFB-H3	5905-6	CTC-6SFB-H4	6905-6
CTC-7SPP-H3	7CSB	CTC-7SPP-H4	7CSA	CTC-7SFB-H3	5905-7	CTC-7SFB-H4	6905-7
CTC-8SPP-H3	8CSB	CTC-8SPP-H4	8CSA	CTC-8SFB-H3	5905-8	CTC-8SFB-H4	6905-8
Unified Fine							
CTF-03SPP-H1	03FSB	CTF-03SPP-H2	03FSA	CTF-03SFB-H1	5906-03	CTF-03SFB-H2	6906-03
CTF-04SPP-H1	04FSB	CTF-04SPP-H2	04FSA	CTF-04SFB-H1	5906-04	CTF-04SFB-H2	6906-04
CTF-06SPP-H1	06FSB	CTF-06SPP-H2	06FSA	CTF-06SFB-H1	5906-06	CTF-06SFB-H2	6906-06
CTF-2SPP-H1	2FSB	CTF-2SPP-H2	2FSA	CTF-2SFB-H1	5906-2	CTF-2SFB-H2	6906-2
CTF-3SPP-H2	3FSB	CTF-3SPP-H3	3FSA	CTF-3SFB-H2	5906-3	CTF-3SFB-H3	6906-3
CTF-4SPP-H2	4FSB	CTF-4SPP-H3	4FSA	CTF-4SFB-H2	5906-4	CTF-4SFB-H3	6906-4
CTF-5SPP-H2	5FSB	CTF-5SPP-H3	5FSA	CTF-5SFB-H2	5906-5	CTF-5SFB-H3	6906-5
CTF-6SPP-H2	6FSB	CTF-6SPP-H3	6FSA	CTF-6SFB-H2	5906-6	CTF-6SFB-H3	6906-6
CTF-7SPP-H3	7FSB	CTF-7SPP-H4	7FSA	CTF-7SFB-H3	5906-7	CTF-7SFB-H4	6906-7
CTF-8SPP-H3	8FSB	CTF-8SPP-H4	8FSA	CTF-8SFB-H3	5906-8	CTF-8SFB-H4	6906-8

CoilThread STI Taps - Cross References

KATO Part Number	Heli-Coil Part Number	KATO Part Number	Heli-Coil Part Number	KATO Part Number	Heli-Coil Part Number	KATO Part Number	Heli-Coil Part Number
Standard Regular Finishing Plug				Standard Regular Finishing Bottoming			
4H		5H		4H		5H	
Metric Coarse							
CTM-2X.4SRP-4H	4687-2	CTM-2X.4SRP-5H	2087-2	CTM-2X.4SRB-4H	4693-2	CTM-2X.4SRB-5H	2093-2
CTM-2.2X.45SRP-4H	4687-2.2	CTM-2.2X.45SRP-5H	2087-2.2	CTM-2.2X.45SRB-4H	4693-2.2	CTM-2.2X.45SRB-5H	2093-2.2
CTM-2.5X.45SRP-4H	4687-2.5	CTM-2.5X.45SRP-5H	2087-2.5	CTM-2.5X.45SRB-4H	4693-2.5	CTM-2.5X.45SRB-5H	2093-2.5
CTM-3X.5SRP-4H	4687-3	CTM-3X.5SRP-5H	2087-3	CTM-3X.5SRB-4H	4693-3	CTM-3X.5SRB-5H	2093-3
CTM-3.5X.6SRP-4H	4687-3.5	CTM-3.5X.6SRP-5H	2087-3.5	CTM-3.5X.6SRB-4H	4693-3.5	CTM-3.5X.6SRB-5H	2093-3.5
CTM-4X.7SRP-4H	4687-4	CTM-4X.7SRP-5H	2087-4	CTM-4X.7SRB-4H	4693-4	CTM-4X.7SRB-5H	2093-4
CTM-5X.8SRP-4H	4687-5	CTM-5X.8SRP-5H	2087-5	CTM-5X.8SRB-4H	4693-5	CTM-5X.8SRB-5H	2093-5
CTM-6X1SRP-4H	4687-6	CTM-6X1SRP-5H	2087-6	CTM-6X1SRB-4H	4693-6	CTM-6X1SRB-5H	2093-6
CTM-7X1SRP-4H	4687-7	CTM-7X1SRP-5H	2087-7	CTM-7X1SRB-4H	4693-7	CTM-7X1SRB-5H	2093-7
CTM-8X1.25SRP-4H	4687-8	CTM-8X1.25SRP-5H	2087-8	CTM-8X1.25SRB-4H	4693-8	CTM-8X1.25SRB-5H	2093-8
CTM-10X1.5SRP-4H	4687-10	CTM-10X1.5SRP-5H	2087-10	CTM-10X1.5SRB-4H	4693-10	CTM-10X1.5SRB-5H	2093-10
CTM-12X1.75SRP-4H	4687-12	CTM-12X1.75SRP-5H	2087-12	CTM-12X1.75SRB-4H	4693-12	CTM-12X1.75SRB-5H	2093-12
CTM-14X2SRP-4H	4687-14	CTM-14X2SRP-5H	2087-14	CTM-14X2SRB-4H	4693-14	CTM-14X2SRB-5H	2093-14
CTM-16X2SRP-4H	4687-16	CTM-16X2SRP-5H	2087-16	CTM-16X2SRB-4H	4693-16	CTM-16X2SRB-5H	2093-16
CTM-18X2.5SRP-4H	4687-18	CTM-18X2.5SRP-5H	2087-18	CTM-18X2.5SRB-4H	4693-18	CTM-18X2.5SRB-5H	2093-18
CTM-20X2.5SRP-4H	4687-20	CTM-20X2.5SRP-5H	2087-20	CTM-20X2.5SRB-4H	4693-20	CTM-20X2.5SRB-5H	2093-20
CTM-22X2.5SRP-4H	4687-22	CTM-22X2.5SRP-5H	2087-22	CTM-22X2.5SRB-4H	4693-22	CTM-22X2.5SRB-5H	2093-22
CTM-24X3SRP-4H	4687-24	CTM-24X3SRP-5H	2087-24	CTM-24X3SRB-4H	4693-24	CTM-24X3SRB-5H	2093-24
CTM-27X3SRP-4H	4687-27	CTM-27X3SRP-5H	2087-27	CTM-27X3SRB-4H	4693-27	CTM-27X3SRB-5H	2093-27
Metric Fine							
CTM-8X1SRP-4H	5484-8	CTM-8X1SRP-5H	4984-8	CTM-8X1SRB-4H	5486-8	CTM-8X1SRB-5H	4986-8
CTM-10X1SRP-4H	5484-10	CTM-10X1SRP-5H	4984-10	CTM-10X1SRB-4H	5486-10	CTM-10X1SRB-5H	4986-10
CTM-10X1.25SRP-4H	5444-10	CTM-10X1.25SRP-5H	4944-10	CTM-10X1.25SRB-4H	5445-10	CTM-10X1.25SRB-5H	4945-10
CTM-12X1.25SRP-4H	5444-12	CTM-12X1.25SRP-5H	4944-12	CTM-12X1.25SRB-4H	5445-12	CTM-12X1.25SRB-5H	4945-12
CTM-12X1.5SRP-4H	5476-12	CTM-12X1.5SRP-5H	4976-12	CTM-12X1.5SRB-4H	5477-12	CTM-12X1.5SRB-5H	4977-12
CTM-14X1.5SRP-4H	5476-14	CTM-14X1.5SRP-5H	4976-14	CTM-14X1.5SRB-4H	5477-14	CTM-14X1.5SRB-5H	4977-14
CTM-16X1.5SRP-4H	5476-16	CTM-16X1.5SRP-5H	4976-16	CTM-16X1.5SRB-4H	5477-16	CTM-16X1.5SRB-5H	4977-16
CTM-18X1.5SRP-4H	5476-18	CTM-18X1.5SRP-5H	4976-18	CTM-18X1.5SRB-4H	5477-18	CTM-18X1.5SRB-5H	4977-18
CTM-20X1.5SRP-4H	5476-20	CTM-20X1.5SRP-5H	4976-20	CTM-20X1.5SRB-4H	5477-20	CTM-20X1.5SRB-5H	4977-20
CTM-22X1.5SRP-4H	5476-22	CTM-22X1.5SRP-5H	4976-22	CTM-22X1.5SRB-4H	5477-22	CTM-22X1.5SRB-5H	4977-22
CTM-18X2SRP-4H	5490-18	CTM-18X2SRP-5H	4990-18	CTM-18X2SRB-4H	5492-18	CTM-18X2SRB-5H	4992-18
CTM-20X2SRP-4H	5490-20	CTM-20X2SRP-5H	4990-20	CTM-20X2SRB-4H	5492-20	CTM-20X2SRB-5H	4992-20
CTM-22X2SRP-4H	5490-22	CTM-22X2SRP-5H	4990-22	CTM-22X2SRB-4H	5492-22	CTM-22X2SRB-5H	4992-22
CTM-24X2SRP-4H	5490-24	CTM-24X2SRP-5H	4990-24	CTM-24X2SRB-4H	5492-24	CTM-24X2SRB-5H	4992-24
CTM-27X2SRP-4H	5490-27	CTM-27X2SRP-5H	4990-27	CTM-27X2SRB-4H	5492-27	CTM-27X2SRB-5H	4992-27
CTM-30X2SRP-4H	5490-30	CTM-30X2SRP-5H	4990-30	CTM-30X2SRB-4H	5492-30	CTM-30X2SRB-5H	4992-30
CTM-33X2SRP-4H	5490-33	CTM-33X2SRP-5H	4990-33	CTM-33X2SRB-4H	5492-33	CTM-33X2SRB-5H	4992-33
CTM-39X2SRP-4H	5490-39	CTM-39X2SRP-5H	4990-39	CTM-39X2SRB-4H	5492-39	CTM-39X2SRB-5H	4992-39
CTM-36X3SRP-4H	5496-36	CTM-36X3SRP-5H	4996-36	CTM-36X3SRB-4H	5497-36	CTM-36X3SRB-5H	4997-36
CTM-39X3SRP-4H	5496-39	CTM-39X3SRP-5H	4996-39	CTM-39X3SRB-4H	5497-39	CTM-39X3SRB-5H	4997-39

CoilThread STI Taps - Cross References

KATO Part Number	Heli-Coil Part Number	KATO Part Number	Heli-Coil Part Number	KATO Part Number	Heli-Coil Part Number	KATO Part Number	Heli-Coil Part Number
Spiral Point Plug				Spiral Flute Bottoming			
4H		5H		4H		5H	
Metric Coarse							
CTM-2X.4SPP-4H	4863-2	CTM-2X.4SPP-5H	4763-2	CTM-2X.4SFB-4H	5081-2	CTM-2X.4SFB-5H	4681-2
CTM-2.2X.45SPP-4H	4863-2.2	CTM-2.2X.45SPP-5H	4763-2.2	CTM-2.2X.45SFB-4H	5081-2.2	CTM-2.2X.45SFB-5H	4681-2.2
CTM-2.5X.45SPP-4H	4863-2.5	CTM-2.5X.45SPP-5H	4763-2.5	CTM-2.5X.45SFB-4H	5081-2.5	CTM-2.5X.45SFB-5H	4681-2.5
CTM-3X.5SPP-4H	4863-3	CTM-3X.5SPP-5H	4763-3	CTM-3X.5SFB-4H	5081-3	CTM-3X.5SFB-5H	4681-3
CTM-3.5X.6SPP-4H	4863-3.5	CTM-3.5X.6SPP-5H	4763-3.5	CTM-3.5X.6SFB-4H	5081-3.5	CTM-3.5X.6SFB-5H	4681-3.5
CTM-4X.7SPP-4H	4863-4	CTM-4X.7SPP-5H	4763-4	CTM-4X.7SFB-4H	5081-4	CTM-4X.7SFB-5H	4681-4
CTM-5X.8SPP-4H	4863-5	CTM-5X.8SPP-5H	4763-5	CTM-5X.8SFB-4H	5081-5	CTM-5X.8SFB-5H	4681-5
CTM-6X1SPP-4H	4863-6	CTM-6X1SPP-5H	4763-6	CTM-6X1SFB-4H	5081-6	CTM-6X1SFB-5H	4681-6
CTM-7X1SPP-4H	4863-7	CTM-7X1SPP-5H	4763-7	CTM-7X1SFB-4H	5081-7	CTM-7X1SFB-5H	4681-7
CTM-8X1.25SPP-4H	4863-8	CTM-8X1.25SPP-5H	4763-8	CTM-8X1.25SFB-4H	5081-8	CTM-8X1.25SFB-5H	4681-8
CTM-10X1.5SPP-4H	4863-10	CTM-10X1.5SPP-5H	4763-10	CTM-10X1.5SFB-4H	5081-10	CTM-10X1.5SFB-5H	4681-10
CTM-12X1.75SPP-4H	4863-12	CTM-12X1.75SPP-5H	4763-12	CTM-12X1.75SFB-4H	5081-12	CTM-12X1.75SFB-5H	4681-12
Metric Fine							
CTM-8X1SPP-4H	4864-8	CTM-8X1SPP-5H	4764-8	CTM-8X1SFB-4H	5066-8	CTM-8X1SFB-5H	4666-8
CTM-10X1SPP-4H	4864-10	CTM-10X1SPP-5H	4764-10	CTM-10X1SFB-4H	5066-10	CTM-10X1SFB-5H	4666-10
CTM-10X1.25SPP-4H	4865-10	CTM-10X1.25SPP-5H	4765-10	CTM-10X1.25SFB-4H	5067-10	CTM-10X1.25SFB-5H	4667-10
CTM-12X1.25SPP-4H	4865-12	CTM-12X1.25SPP-5H	4765-12	CTM-12X1.25SFB-4H	5067-12	CTM-12X1.25SFB-5H	4667-12
CTM-12X1.5SPP-4H	4866-12	CTM-12X1.5SPP-5H	4766-12	CTM-12X1.5SFB-4H	5068-12	CTM-12X1.5SFB-5H	4668-12

CoilThread STI Gages

KATO CoilThread STI (Screw Thread Insert) Thread Plug Gages are designed to check the accuracy of the internal thread of an STI tapped hole. Gaging the tapped hole prior to installation of the insert is critical to ensure the accuracy of the finished thread. If the tapped hole gages correctly, the finished thread will also be accurate once the insert is properly installed and seated. It is not necessary to gage the installed insert. Gaging of the tapped thread is specified because a standard gage may not freely enter an installed insert. The insert will seat itself once a bolt or screw is installed and tightened (Ref. NASM33537). In fact, it is not possible to gage a screw locking insert because of the locking coil(s).

KATO offers two types of STI Thread Plug Gages (for unified sizes):

Working Gages:

Recommended for production use since their greater tolerance allows for more wear.

Reference Gages:

Have pitch diameters at or very close to the basic size and are to be used as master gages.

KATO STI Gages include a “GO” and “HI” (NO GO) member. The Working gage GO member has a 0.0002 wear allowance on the pitch diameter. The GO member checks the basic pitch diameter, major diameter minimum and lead. The HI member checks the maximum pitch diameter. **The minor diameter must be checked separately with a graduated pin set.**

Features and Benefits:

- Available in 3B or 2B (Unified) and 4H or 5H (Metric) Class of Fit.
- Full range of Unified and Metric thread sizes available.
- Ensures accuracy of the finished threads.
- Lower cost than similar gages from competitors.

CoilThread STI Gages - Dimensions

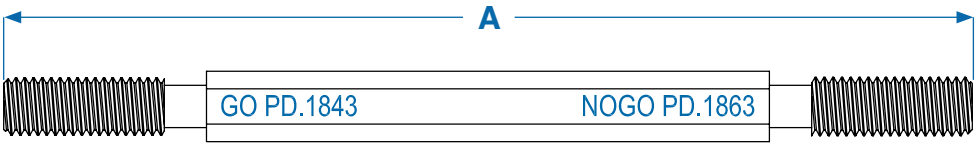

Thread Size	Pitch Diameter (in)				Length A
	3B		2B		
	Go	NoGo	Go	NoGo	
Unified Coarse					
1-64	0.0832	0.0843	0.0832	0.0850	2.5
2-56	0.0976	0.0989	0.0976	0.0996	2.5
3-48	0.1126	0.1140	0.1126	0.1148	2.5
4-40	0.1283	0.1299	0.1283	0.1308	2.9
5-40	0.1413	0.1430	0.1413	0.1438	2.9
6-32	0.1583	0.1601	0.1583	0.1611	2.9
8-32	0.1843	0.1862	0.1843	0.1872	3.1
10-24	0.2170	0.2192	0.2170	0.2203	3.1
12-24	0.2430	0.2453	0.2430	0.2464	3.1
1/4-20	0.2825	0.2851	0.2825	0.2863	3.5
5/16-18	0.3486	0.3515	0.3486	0.3529	3.5
3/8-16	0.4156	0.4189	0.4156	0.4203	4.6
7/16-14	0.4839	0.4875	0.4839	0.4890	4.6
1/2-13	0.5499	0.5537	0.5499	0.5554	4.6
9/16-12	0.6167	0.6208	0.6167	0.6225	5.1
5/8-11	0.6841	0.6885	0.6841	0.6903	5.1
3/4-10	0.8149	0.8196	0.8149	0.8216	5.1
7/8-9	0.9471	0.9522	0.9471	0.9543	5.8
1-8	1.0812	1.0868	1.0812	1.0868	5.8
1-1/8-7	1.2178	1.2239	1.2178	1.2262	5.8
1-1/4-7	1.3428	1.3490	1.3428	1.3514	6.8
1-3/8-6	1.4832	1.4900	1.4832	1.4926	6.8
1-1/2-6	1.6082	1.6151	1.6082	1.6177	6.8
Unified Fine					
0-80	0.0681	0.0690	0.0681	0.0697	2.9
3-56	0.1106	0.1119	0.1106	0.1126	2.5
4-48	0.1256	0.1271	0.1256	0.1279	2.9
6-40	0.1543	0.1560	0.1543	0.1569	2.9
8-36	0.1821	0.1840	0.1821	0.1849	3.1
10-32	0.2103	0.2123	0.2103	0.2133	3.1
1/4-28	0.2732	0.2754	0.2732	0.2765	4.0
5/16-24	0.3395	0.3421	0.3395	0.3433	4.0
3/8-24	0.4020	0.4047	0.4020	0.4059	4.6
7/16-20	0.4700	0.4731	0.4700	0.4744	4.6
1/2-20	0.5325	0.5357	0.5325	0.5371	4.6
9/16-18	0.5986	0.6020	0.5986	0.6035	5.1
5/8-18	0.6611	0.6646	0.6611	0.6661	5.1
3/4-16	0.7906	0.7945	0.7906	0.7961	5.1
7/8-14	0.9214	0.9257	0.9214	0.9274	5.8
1-12	1.0542	1.0589	1.0542	1.0608	5.8
1-1/8-12	1.1792	1.1841	1.1792	1.1860	5.8
1-1/4-12	1.3042	1.3092	1.3042	1.3112	6.8
1-3/8-12	1.4292	1.4343	1.4292	1.4364	6.8
1-1/2-12	1.5542	1.5595	1.5542	1.5615	6.8

Thread Size	Pitch Diameter (mm)				Length A
	4H		5H		
	Go	NoGo	Go	NoGo	
Metric Coarse					
M2X0.4	2.260	2.295	2.260	2.310	63.5
M2.2X0.45	2.492	2.532	2.492	2.547	63.5
M2.5X0.45	2.792	2.832	2.792	2.847	63.5
M3X0.5	3.325	3.367	3.325	3.384	73.6
M3.5X0.6	3.890	3.940	3.890	3.959	73.6
M4X0.7	4.455	4.509	4.455	4.529	78.7
M5X0.8	5.520	5.577	5.520	5.597	78.7
M6X1	6.650	6.719	6.650	6.742	101.6
M7X1	7.650	7.719	7.650	7.742	101.6
M8X1.25	8.812	8.886	8.812	8.911	101.6
M10X1.5	10.974	11.061	10.974	11.089	116.8
M12X1.75	13.137	13.236	13.137	13.271	116.8
M14X2	15.299	15.406	15.299	15.444	129.5
M16X2	17.299	17.406	17.299	17.444	129.5
M18X2.5	19.624	19.738	19.624	19.778	129.5
M20X2.5	21.624	21.738	21.624	21.778	129.5
M22X2.5	23.624	23.738	23.624	23.778	129.5
M24X3	25.948	26.093	25.948	26.135	147.3
M27X3	28.948	29.093	28.948	29.135	147.3
Metric Fine					
M8X1	8.650	8.719	8.650	8.742	101.6
M10X1	10.650	10.719	10.650	10.742	116.8
M10X1.25	10.812	10.886	10.812	10.911	116.8
M12X1.25	12.812	12.898	12.812	12.926	116.8
M12X1.5	12.974	13.067	12.974	13.099	116.8
M14X1.5	14.974	15.067	14.974	15.099	129.5
M16X1.5	16.974	17.067	16.974	17.099	129.5
M18X1.5	18.974	19.067	18.974	19.099	129.5
M20X1.5	20.974	21.067	20.974	21.099	129.5
M22X1.5	22.974	23.067	22.974	23.099	129.5
M18X2	19.299	19.406	19.299	19.444	129.5
M20X2	21.299	21.406	21.299	21.444	129.5
M22X2	23.299	23.406	23.299	23.444	129.5
M24X2	25.299	25.414	25.299	25.454	147.3
M27X2	28.299	28.414	28.299	28.455	147.3
M30X2	31.299	31.414	31.299	31.454	147.3
M33X2	34.299	34.414	34.299	34.454	147.3
M39X2	40.299	40.414	40.299	40.454	171.5
M36X3	37.948	38.093	37.948	38.135	171.5
M39X3	40.948	41.093	40.948	41.135	171.5

1. All dimensions for unified sizes are in inches.
2. All dimensions for metric sizes are in millimeters.
3. All dimensions are for reference only.

CoilThread STI Gages - Part Numbers

Tool Type:
CG - CoilThread Gage (STI)

CG C - 02 X - 3B

Thread Designation:
- **C** - Unified Coarse
- **F** - Unified Fine
- **M** - Metric Sizes

Size Designation

Style / Type:
- **X** - Working
- **W** - References

Class of Fit:
See notes

Thread Size	Working Gages		Reference Gages	
	3B	2B	3B	2B
Unified Coarse				
1-64	CGC-01X-3B	CGC-01X-2B	CGC-01W-3B	CGC-01W-2B
2-56	CGC-02X-3B	CGC-02X-2B	CGC-02W-3B	CGC-02W-2B
3-48	CGC-03X-3B	CGC-03X-2B	CGC-03W-3B	CGC-03W-2B
4-40	CGC-04X-3B	CGC-04X-2B	CGC-04W-3B	CGC-04W-2B
5-40	CGC-05X-3B	CGC-05X-2B	CGC-05W-3B	CGC-05W-2B
6-32	CGC-06X-3B	CGC-06X-2B	CGC-06W-3B	CGC-06W-2B
8-32	CGC-2X-3B	CGC-2X-2B	CGC-2W-3B	CGC-2W-2B
10-24	CGC-3X-3B	CGC-3X-2B	CGC-3W-3B	CGC-3W-2B
12-24	CGC-1X-3B	CGC-1X-2B	CGC-1W-3B	CGC-1W-2B
1/4-20	CGC-4X-3B	CGC-4X-2B	CGC-4W-3B	CGC-4W-2B
5/16-18	CGC-5X-3B	CGC-5X-2B	CGC-5W-3B	CGC-5W-2B
3/8-16	CGC-6X-3B	CGC-6X-2B	CGC-6W-3B	CGC-6W-2B
7/16-14	CGC-7X-3B	CGC-7X-2B	CGC-7W-3B	CGC-7W-2B
1/2-13	CGC-8X-3B	CGC-8X-2B	CGC-8W-3B	CGC-8W-2B
9/16-12	CGC-9X-3B	CGC-9X-2B	CGC-9W-3B	CGC-9W-2B
5/8-11	CGC-10X-3B	CGC-10X-2B	CGC-10W-3B	CGC-10W-2B
3/4-10	CGC-12X-3B	CGC-12X-2B	CGC-12W-3B	CGC-12W-2B
7/8-9	CGC-14X-3B	CGC-14X-2B	CGC-14W-3B	CGC-14W-2B
1-8	CGC-16X-3B	CGC-16X-2B	CGC-16W-3B	CGC-16W-2B
1-1/8-7	CGC-18X-3B	CGC-18X-2B	CGC-18W-3B	CGC-18W-2B
1-1/4-7	CGC-20X-3B	CGC-20X-2B	CGC-20W-3B	CGC-20W-2B
1-3/8-6	CGC-22X-3B	CGC-22X-2B	CGC-22W-3B	CGC-22W-2B
1-1/2-6	CGC-24X-3B	CGC-24X-2B	CGC-24W-3B	CGC-24W-2B
Unified Fine				
0-80	CGF-00X-3B	CGF-00X-2B	CGF-00W-3B	CGF-00W-2B
3-56	CGF-03X-3B	CGF-03X-2B	CGF-03W-3B	CGF-03W-2B
4-48	CGF-04X-3B	CGF-04X-2B	CGF-04W-3B	CGF-04W-2B
6-40	CGF-06X-3B	CGF-06X-2B	CGF-06W-3B	CGF-06W-2B
8-36	CGF-2X-3B	CGF-2X-2B	CGF-2W-3B	CGF-2W-2B
10-32	CGF-3X-3B	CGF-3X-2B	CGF-3W-3B	CGF-3W-2B
1/4-28	CGF-4X-3B	CGF-4X-2B	CGF-4W-3B	CGF-4W-2B
5/16-24	CGF-5X-3B	CGF-5X-2B	CGF-5W-3B	CGF-5W-2B
3/8-24	CGF-6X-3B	CGF-6X-2B	CGF-6W-3B	CGF-6W-2B
7/16-20	CGF-7X-3B	CGF-7X-2B	CGF-7W-3B	CGF-7W-2B
1/2-20	CGF-8X-3B	CGF-8X-2B	CGF-8W-3B	CGF-8W-2B
9/16-18	CGF-9X-3B	CGF-9X-2B	CGF-9W-3B	CGF-9W-2B
5/8-18	CGF-10X-3B	CGF-10X-2B	CGF-10W-3B	CGF-10W-2B
3/4-16	CGF-12X-3B	CGF-12X-2B	CGF-12W-3B	CGF-12W-2B
7/8-14	CGF-14X-3B	CGF-14X-2B	CGF-14W-3B	CGF-14W-2B
1-12	CGF-16X-3B	CGF-16X-2B	CGF-16W-3B	CGF-16W-2B
1-1/8-12	CGF-18X-3B	CGF-18X-2B	CGF-18W-3B	CGF-18W-2B
1-1/4-12	CGF-20X-3B	CGF-20X-2B	CGF-20W-3B	CGF-20W-2B
1-3/8-12	CGF-22X-3B	CGF-22X-2B	CGF-22W-3B	CGF-22W-2B
1-1/2-12	CGF-24X-3B	CGF-24X-2B	CGF-24W-3B	CGF-24W-2B

Thread Size	Working Gages	
	4H	5H
Metric Coarse		
M2X0.4	CGM-2X.4-4H	CGM-2X.4-5H
M2.2X0.45	CGM-2.2X.45-4H	CGM-2.2X.45-5H
M2.5X0.45	CGM-2.5X.45-4H	CGM-2.5X.45-5H
M3X0.5	CGM-3X.5-4H	CGM-3X.5-5H
M3.5X0.6	CGM-3.5X.6-4H	CGM-3.5X.6-5H
M4X0.7	CGM-4X.7-4H	CGM-4X.7-5H
M5X0.8	CGM-5X.8-4H	CGM-5X.8-5H
M6X1	CGM-6X1-4H	CGM-6X1-5H
M7X1	CGM-7X1-4H	CGM-7X1-5H
M8X1.25	CGM-8X1.25-4H	CGM-8X1.25-5H
M10X1.5	CGM-10X1.5-4H	CGM-10X1.5-5H
M12X1.75	CGM-12X1.75-4H	CGM-12X1.75-5H
M14X2	CGM-14X2-4H	CGM-14X2-5H
M16X2	CGM-16X2-4H	CGM-16X2-5H
M18X2.5	CGM-18X2.5-4H	CGM-18X2.5-5H
M20X2.5	CGM-20X2.5-4H	CGM-20X2.5-5H
M22X2.5	CGM-22X2.5-4H	CGM-22X2.5-5H
M24X3	CGM-24X3-4H	CGM-24X3-5H
M27X3	CGM-27X3-4H	CGM-27X3-5H
Metric Fine		
M8X1	CGM-8X1-4H	CGM-8X1-5H
M10X1	CGM-10X1-4H	CGM-10X1-5H
M10X1.25	CGM-10X1.25-4H	CGM-10X1.25-5H
M12X1.25	CGM-12X1.25-4H	CGM-12X1.25-5H
M12X1.5	CGM-12X1.5-4H	CGM-12X1.5-5H
M14X1.5	CGM-14X1.5-4H	CGM-14X1.5-5H
M16X1.5	CGM-16X1.5-4H	CGM-16X1.5-5H
M18X1.5	CGM-18X1.5-4H	CGM-18X1.5-5H
M20X1.5	CGM-20X1.5-4H	CGM-20X1.5-5H
M22X1.5	CGM-22X1.5-4H	CGM-22X1.5-5H
M18X2	CGM-18X2-4H	CGM-18X2-5H
M20X2	CGM-20X2-4H	CGM-20X2-5H
M22X2	CGM-22X2-4H	CGM-22X2-5H
M24X2	CGM-24X2-4H	CGM-24X2-5H
M27X2	CGM-27X2-4H	CGM-27X2-5H
M30X2	CGM-30X2-4H	CGM-30X2-5H
M33X2	CGM-33X2-4H	CGM-33X2-5H
M39X2	CGM-39X2-4H	CGM-39X2-5H
M36X3	CGM-36X3-4H	CGM-36X3-5H
M39X3	CGM-39X3-4H	CGM-39X3-5H

1. Gaging of the tapped thread is specified because a standard gage may not freely enter an installed insert. The insert will seat itself once a bolt or screw is installed and tightened.
2. The "GO" member checks basic pitch diameter, major diameter minimum and lead. The "HI" member checks maximum pitch diameter. The minor diameter is checked separately with a graduated pin set.
3. The Class of Fit specifies the pitch diameter tolerance of the tapped hole, with class 3B (Unified) and 4H (Metric) being the tighter range usually specified in military/aerospace applications. Class 2B (Unified) and 5H (Metric) gages have provide a broader tolerance range and are normally specified in commercial/ industrial applications.

CoilThread STI Gages - Cross References

KATO Part Number	Heli-Coil Part Number	KATO Part Number	Heli-Coil Part Number	KATO Part Number	Heli-Coil Part Number	KATO Part Number	Heli-Coil Part Number
3B Working		2B Working		3B Reference		2B Reference	
Unified Coarse							
CGC-01X-3B	3688-01	CGC-01X-2B	1442-01	CGC-01W-3B	1688-01	CGC-01W-2B	1440-01
CGC-02X-3B	3688-02	CGC-02X-2B	1442-02	CGC-02W-3B	1688-02	CGC-02W-2B	1440-02
CGC-03X-3B	3688-03	CGC-03X-2B	1442-03	CGC-03W-3B	1688-03	CGC-03W-2B	1440-03
CGC-04X-3B	3688-04	CGC-04X-2B	1442-04	CGC-04W-3B	1688-04	CGC-04W-2B	1440-04
CGC-05X-3B	3688-05	CGC-05X-2B	1442-05	CGC-05W-3B	1688-05	CGC-05W-2B	1440-05
CGC-06X-3B	3688-06	CGC-06X-2B	1442-06	CGC-06W-3B	1688-06	CGC-06W-2B	1440-06
CGC-2X-3B	3688-2	CGC-2X-2B	1442-2	CGC-2W-3B	1688-2	CGC-2W-2B	1440-2
CGC-3X-3B	3688-3	CGC-3X-2B	1442-3	CGC-3W-3B	1688-3	CGC-3W-2B	1440-3
CGC-1X-3B	3688-1	CGC-1X-2B	1442-1	CGC-1W-3B	1688-1	CGC-1W-2B	1440-1
CGC-4X-3B	3688-4	CGC-4X-2B	1442-4	CGC-4W-3B	1688-4	CGC-4W-2B	1440-4
CGC-5X-3B	3688-5	CGC-5X-2B	1442-5	CGC-5W-3B	1688-5	CGC-5W-2B	1440-5
CGC-6X-3B	3688-6	CGC-6X-2B	1442-6	CGC-6W-3B	1688-6	CGC-6W-2B	1440-6
CGC-7X-3B	3688-7	CGC-7X-2B	1442-7	CGC-7W-3B	1688-7	CGC-7W-2B	1440-7
CGC-8X-3B	3688-8	CGC-8X-2B	1442-8	CGC-8W-3B	1688-8	CGC-8W-2B	1440-8
CGC-9X-3B	3688-9	CGC-9X-2B	1442-9	CGC-9W-3B	1688-9	CGC-9W-2B	1440-9
CGC-10X-3B	3688-10	CGC-10X-2B	1442-10	CGC-10W-3B	1688-10	CGC-10W-2B	1440-10
CGC-12X-3B	3688-12	CGC-12X-2B	1442-12	CGC-12W-3B	1688-12	CGC-12W-2B	1440-12
CGC-14X-3B	3688-14	CGC-14X-2B	1442-14	CGC-14W-3B	1688-14	CGC-14W-2B	1440-14
CGC-16X-3B	3688-16	CGC-16X-2B	1442-16	CGC-16W-3B	1688-16	CGC-16W-2B	1440-16
CGC-18X-3B	3688-18	CGC-18X-2B	1442-18	CGC-18W-3B	1688-18	CGC-18W-2B	1440-18
CGC-20X-3B	3688-20	CGC-20X-2B	1442-20	CGC-20W-3B	1688-20	CGC-20W-2B	1440-20
CGC-22X-3B	3688-22	CGC-22X-2B	1442-22	CGC-22W-3B	1688-22	CGC-22W-2B	1440-22
CGC-24X-3B	3688-24	CGC-24X-2B	1442-24	CGC-24W-3B	1688-24	CGC-24W-2B	1440-24
Unified Fine							
CGF-00X-3B	---	CGF-00X-2B	---	CGF-00W-3B	---	CGF-00W-2B	---
CGF-03X-3B	3694-03	CGF-03X-2B	1443-03	CGF-03W-3B	1694-03	CGF-03W-2B	1441-03
CGF-04X-3B	3694-04	CGF-04X-2B	1443-04	CGF-04W-3B	1694-04	CGF-04W-2B	1441-04
CGF-06X-3B	3694-06	CGF-06X-2B	1443-06	CGF-06W-3B	1694-06	CGF-06W-2B	1441-06
CGF-2X-3B	3694-2	CGF-2X-2B	1443-2	CGF-2W-3B	1694-2	CGF-2W-2B	1441-2
CGF-3X-3B	3694-3	CGF-3X-2B	1443-3	CGF-3W-3B	1694-3	CGF-3W-2B	1441-3
CGF-4X-3B	3694-4	CGF-4X-2B	1443-4	CGF-4W-3B	1694-4	CGF-4W-2B	1441-4
CGF-5X-3B	3694-5	CGF-5X-2B	1443-5	CGF-5W-3B	1694-5	CGF-5W-2B	1441-5
CGF-6X-3B	3694-6	CGF-6X-2B	1443-6	CGF-6W-3B	1694-6	CGF-6W-2B	1441-6
CGF-7X-3B	3694-7	CGF-7X-2B	1443-7	CGF-7W-3B	1694-7	CGF-7W-2B	1441-7
CGF-8X-3B	3694-8	CGF-8X-2B	1443-8	CGF-8W-3B	1694-8	CGF-8W-2B	1441-8
CGF-9X-3B	3694-9	CGF-9X-2B	1443-9	CGF-9W-3B	1694-9	CGF-9W-2B	1441-9
CGF-10X-3B	3694-10	CGF-10X-2B	1443-10	CGF-10W-3B	1694-10	CGF-10W-2B	1441-10
CGF-12X-3B	3694-12	CGF-12X-2B	1443-12	CGF-12W-3B	1694-12	CGF-12W-2B	1441-12
CGF-14X-3B	3694-14	CGF-14X-2B	1443-14	CGF-14W-3B	1694-14	CGF-14W-2B	1441-14
CGF-16X-3B	3694-16	CGF-16X-2B	1443-16	CGF-16W-3B	1694-16	CGF-16W-2B	1441-16
CGF-18X-3B	3694-18	CGF-18X-2B	1443-18	CGF-18W-3B	1694-18	CGF-18W-2B	1441-18
CGF-20X-3B	3694-20	CGF-20X-2B	1443-20	CGF-20W-3B	1694-20	CGF-20W-2B	1441-20
CGF-22X-3B	3694-22	CGF-22X-2B	1443-22	CGF-22W-3B	1694-22	CGF-22W-2B	1441-22
CGF-24X-3B	3694-24	CGF-24X-2B	1443-24	CGF-24W-3B	1694-24	CGF-24W-2B	1441-24

CoilThread STI Gages - Cross References

KATO Part Number	Heli-Coil Part Number	KATO Part Number	Heli-Coil Part Number
4H Working		5H Working	
Metric Coarse			
CGM-2X.4-4H	4624-2	CGM-2X.4-5H	1324-2
CGM-2.2X.45-4H	4624-2.2	CGM-2.2X.45-5H	1324-2.2
CGM-2.5X.45-4H	4624-2.5	CGM-2.5X.45-5H	1324-2.5
CGM-3X.5-4H	4624-3	CGM-3X.5-5H	1324-3
CGM-3.5X.6-4H	4624-3.5	CGM-3.5X.6-5H	1324-3.5
CGM-4X.7-4H	4624-4	CGM-4X.7-5H	1324-4
CGM-5X.8-4H	4624-5	CGM-5X.8-5H	1324-5
CGM-6X1-4H	4624-6	CGM-6X1-5H	1324-6
CGM-7X.1-4H	4624-7	CGM-7X1-5H	1324-7
CGM-8X1.25-4H	4624-8	CGM-8X1.25-5H	1324-8
CGM-10X1.5-4H	4624-10	CGM-10X1.5-5H	1324-10
CGM-12X1.75-4H	4624-12	CGM-12X.1.75-5H	1324-12
CGM-14X2-4H	4624-14	CGM-14X2-5H	1324-14
CGM-16X2-4H	4624-16	CGM-16X2-5H	1324-16
CGM-18X2.5-4H	4624-18	CGM-18X2.5-5H	1324-18
CGM-20X2.5-4H	4624-20	CGM-20X2.5-5H	1324-20
CGM-22X2.5-4H	4624-22	CGM-22X2.5-5H	1324-22
CGM-24X3-4H	4624-24	CGM-24X3-5H	1324-24
CGM-27X3-4H	4624-27	CGM-27X3-5H	1324-27
Metric Fine			
CGM-8X1-4H	5416-8	CGM-8X1-5H	4916-8
CGM-10X1-4H	5416-10	CGM-10X1-5H	4916-10
CGM-10X1.25-4H	5424-10	CGM-10X1.25-5H	4924-10
CGM-12X1.25-4H	5424-12	CGM-12X1.25-5H	4924-12
CGM-12X1.5-4H	5480-12	CGM-12X1.5-5H	4980-12
CGM-14X1.5-4H	5480-14	CGM-14X1.5-5H	4980-14
CGM-16X1.5-4H	5480-16	CGM-16X1.5-5H	4980-16
CGM-18X1.5-4H	5480-18	CGM-18X1.5-5H	4980-18
CGM-20X1.5-4H	5480-20	CGM-20X1.5-5H	4980-20
CGM-22X1.5-4H	5480-22	CGM-22X1.5-5H	4980-22
CGM-18X2-4H	5418-18	CGM-18X2-5H	4918-18
CGM-20X2-4H	5418-20	CGM-20X2-5H	4918-20
CGM-22X2-4H	5418-22	CGM-22X2-5H	4918-22
CGM-24X2-4H	5418-24	CGM-24X2-5H	4918-24
CGM-27X2-4H	5418-27	CGM-27X2-5H	4918-27
CGM-30X2-4H	5418-30	CGM-30X2-5H	4918-30
CGM-33X2-4H	5418-33	CGM-33X2-5H	4918-33
CGM-39X2-4H	--	CGM-39X2-5H	--
CGM-36X3-4H	--	CGM-36X3-5H	--
CGM-39X3-4H	5421-39	CGM-39X3-5H	4918-39

CoilThread Tools Part Numbering System

The CoilThread tools part numbering system was designed to make identifying and ordering KATO installation and removal tools quick and easy. Each letter and number is used to clearly identify the tool type, style, and size.

The KATO tool part number includes up to 5 segments. The example below is a Tangless KATO Prewinder Air tool for a 4-40 thread size.

2	KPA	C	- 04	_
1	2	3	4	5

1 Tool Type (Tangless or Tanged):

- **Blank** - Tanged tool
- **2** - prefix for CoilThread II Tangless tool

2 Tool Style:

- **KHE** - KATO Hex Electric
- **KIP** - KATO Installation Pawl
- **KPA** - KATO Prewinder Air
- **KPE** - KATO Prewinder Electric
- **KPH** - KATO Prewinder Hand
- **KRE** - KATO Round Shaft
- **KRP** - KATO Removal Pawl
- **KRT** - KATO Removal Tool
- **KTBT** - KATO Tang Break-off Tool

3 Thread Designation:

- **C** - Unified Coarse
- **F** - Unified Fine
- **M** - Metric
- **V** - Various

4 Size Designation

5 Component / Replacement Part Suffix:

- **D** - Prewinder Body
- **G** - Nylon Guard
- **H** - Housing
- **K** - Pawl Kit (only on pawl part numbers 2KIP & 2KRP series)
- **M** - Mandrel or Mandrel Assembly (based on tool type and where applicable)
- **S** - Spacer Set (where applicable)

Tangless Installation Pawl

The **KATO One Pawl Fits All™** system was designed to simplify the Pawl ordering process, inventory management, and reduce overall costs for users of KATO Tangless inserts & tools. Here's how it works… Order any size KATO installation pawl (2KIP Series) and use it in any KATO Tangless installation tool of the same size, it's that simple!

Pawl Kit includes:

- 1 Pawl (2KIP Series)
- 2 Springs (2KSPR Series)
- 2 Pins (2KPIN Series)

For example, order a 10-32 installation pawl (2KIPF-3) and it's guaranteed to work with all KATO 10-32 Tangless installation tools:

Guaranteed Fit	KATO Tool Part Number	Description
✔	2KHEF-F3	10-32 Hex Electric Tool (Free-Running)
✔	2KHEF-L3	10-32 Hex Electric Tool (Locking)
✔	2KPAF-3	10-32 Prewinder Air Tool
✔	2KPEF-3	10-32 Prewinder Electric Tool
✔	2KPHF-3	10-32 Prewinder Hand Tool
✔	2KREF-F3	10-32 Round Shaft Tool (Free-Running)
✔	2KREF-L3	10-32 Round Shaft Tool (Locking)

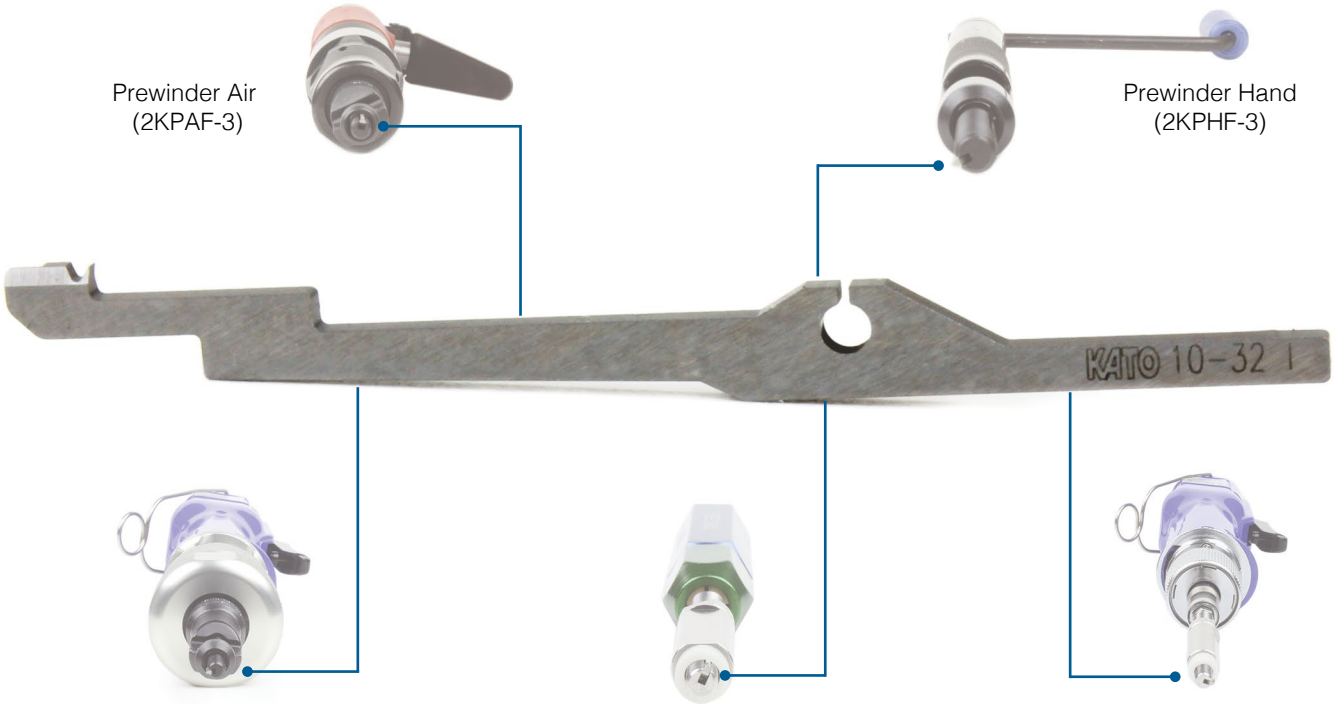

Tangless Installation Pawl

Dimensions

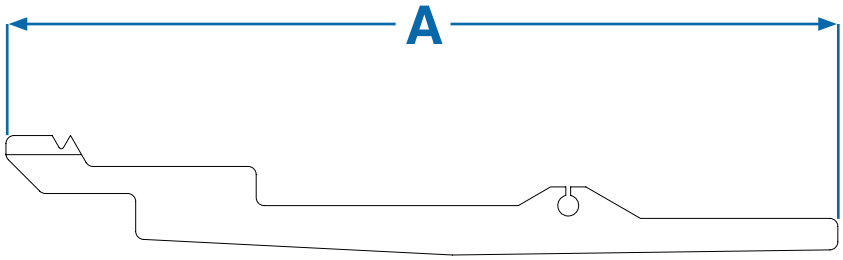

Thread Size	Length A
Unified Coarse	
1-64	0.95
2-56	1.95
4-40	1.82
6-32	1.85
8-32	1.90
10-24	2.00
1/4-20	1.87
5/16-18	2.09
3/8-16	2.20

Thread Size	Length A
Unified Fine	
0-80	0.80
10-32	1.68
1/4-28	1.91
5/16-24	2.05
3/8-24	2.15
7/16-20	2.40
1/2-20	2.20

Thread Size	Length A
Metric Coarse	
M2X0.4	0.95
M2.5X0.45	1.55
M3X0.5	1.66
M4X0.7	1.49
M5X0.8	1.68
M6X1	1.70
M8X1.25	2.23
M10X1.5	2.21
M12X1.75	2.59

Part Numbers

Thread Size	Tangless Installation Pawl	Tangless Installation Pawl Kit
Unified Coarse		
1-64	2KIPC-01	2KIPC-01K
2-56	2KIPC-02	2KIPC-02K
4-40	2KIPC-04	2KIPC-04K
6-32	2KIPC-06	2KIPC-06K
8-32	2KIPC-2	2KIPC-2K
10-24	2KIPC-3	2KIPC-3K
1/4-20	2KIPC-4	2KIPC-4K
5/16-18	2KIPC-5	2KIPC-5K
3/8-16	2KIPC-6	2KIPC-6K
7/16-14	2KIPC-7	2KIPC-7K
1/2-13	2KIPC-8	2KIPC-8K
Unified Fine		
0-80	2KIPF-00	2KIPF-00K
10-32	2KIPF-3	2KIPF-3K
1/4-28	2KIPF-4	2KIPF-4K
5/16-24	2KIPF-5	2KIPF-5K
3/8-24	2KIPF-6	2KIPF-6K
7/16-20	2KIPF-7	2KIPF-7K
1/2-20	2KIPF-8	2KIPF-8K
Metric Coarse		
M2X0.4	2KIPM-2	2KIPM-2K
M2.5X0.45	2KIPM-2.5	2KIPM-2.5K
M3X0.5	2KIPM-3	2KIPM-3K
M4X0.7	2KIPM-4	2KIPM-4K
M5X0.8	2KIPM-5	2KIPM-5K
M6X1	2KIPM-6	2KIPM-6K
M8X1.25[1]	2KIPM-8	2KIPM-8K
M10X1.5[1]	2KIPM-10	2KIPM-10K
M12X1.75[1]	2KIPM-12	2KIPM-12K

Cross References

KATO Part Number	Superseded KATO Pawl Number			
	Air Tool	Hex Tool	Round Tool	Hand Tool
Unified Coarse				
2KIPC-02	2CT11400-02	2CTSB-02CP	CT16402-02	TCIC-02P
2KIPC-04	2CT11400-04	2CTSB-04CP	CT16402-04	TCIC-04P
2KIPC-06	2CT11400-06	2CTSB-06CP	CT16402-06	TCIC-06P
2KIPC-2	2CT11400-2	2CTSB-2CP	CT16402-2	TCIC-2P
2KIPC-3	2CT11400-3	2CTSB-3CP	CT16402-3	TCIC-3P
2KIPC-4	2CT11400-4	2CTSB-4CP	CT16402-4	TCIC-4P
2KIPC-5	2CT11400-5	---	---	TCIC-5P
2KIPC-6	2CT11400-6	---	---	TCIC-6P
Unified Fine				
2KIPF-3	2CT11401-3A	2CTSB-3FP	CT16403-3	TCIF-3P
2KIPF-4	2CT11401-4	---	---	TCIF-4P
2KIPF-5	2CT11401-5	---	---	TCIF-5P
2KIPF-6	2CT11401-6	---	---	TCIF-6P
Metric Coarse				
2KIPM-2.5	2CT11400-M2.5	2CTSB-M2.5P	CT16402-M2.5	TCIM-2.5P
2KIPM-3	2CT11400-M3	2CTSB-M3P	CT16402-M3	TCIM-3P
2KIPM-4	2CT11400-M4	2CTSB-M4P	CT16402-M4	TCIM-4P
2KIPM-5	2CT11400-M5	2CTSB-M5P	CT16402-M5	TCIM-5P
2KIPM-6	2CT11400-M6	2CTSB-M6P	CT16402-M6	TCIM-6P
2KIPM-8[1]	2CT11400-M8	2CTSB-M8P	CT16402-M8	TCIM-8P
2KIPM-10[1]	2CT11400-M10	2CTSB-M10P	CT16402-M10	TCIM-10P
2KIPM-12[1]	2CT11400-M12	2CTSB-M12P	CT16402-M12	TCIM-12P

1. Not compatible with the KATO One Pawl Fits All, 2KHEM, and 2KREM at this time.
2. Pawl Kit includes one pawl, two pins, and two springs.

KFS-30 Cordless Driver

The **KFS-30 Cordless Driver** is designed for low to medium volume users of KATO Tangless and tanged CoilThread inserts. The KFS-30 is the industry's first and only cordless tool that utilizes a Prewinder, which compresses the insert allowing for much easier and reliable installation.

The KFS-30 can install inserts from 1-64 and M2 up to 1/4" and M6, all powered by a rechargeable lithium-ion battery. The KFS-30 has an auto-reversing feature; once the insert is installed the driver will automatically reverse minimizing overall installation time. The KFS-30 utilizes a powerful brushless motor and only one torque adjusting compression spring, simplifying the setup process. The KFS-30's highly adjustable torque ensures consistent installation and prolongs the life of the installation tool. In addition, the KFS-30 is designed to install both strip-feed packaged inserts (when used with the KATO Prewinder Electric Tool - KPE series on page 62) and bulk packaged inserts (when used with the KATO Hex Electric Tool - KHE series on page 63).

Features and Benefits

- World's First Cordless Prewinder Installation Tool!
- Works with Tangless and tanged CoilThread inserts.
- Works with strip-feed and bulk packaged inserts.
- Installs inserts up to 1/4" and M6.
- Auto-Reversing for reduced installation time.
- Adjustable torque, helps prolong the life of installation tools.
- 100% compatible with existing KATO Prewinder Electic tools (KPE Series).
- 100% compatible with existing KATO Hex Electic tools (KHE Series).
- Portable, clean and quiet (ideal for clean room operation).
- Fast charging Lithium-Ion battery.

Shown with **KATO Linear Torque Arm (2KLRM-1)** see page 78

How to Order

Prewinder Electric Complete tool requires the following parts:

- KFS-30 (CT5430) includes 2 Li-Ion Batteries and Charger.
- KATO Prewinder Electric (See page 62) - Requires CT5430-PA.
- KATO also recommends using the KATO Linear Torque Arm (See page 78).

Hex Electric Complete tool requires the following parts:

- KFS-30 (CT5430) includes 2 Li-Ion Batteries and Charger.
- KATO Hex Electric (See page 63).

KFS-30 Cordless Driver Dimensions

KFS-30 Cordless Driver

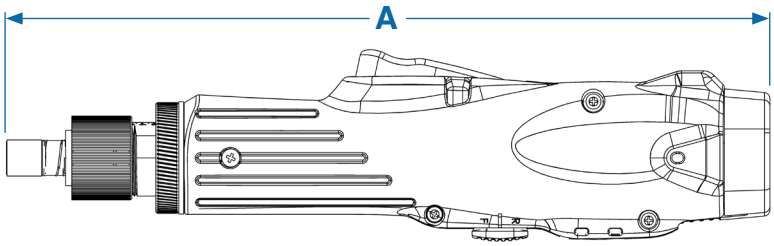

Torque (lbf-in)	Rpm @ High	Rpm @ Low	Tap Capacity	Length A	Length B	Length C	Grip Diameter	Weight	Chuck Capacity
0.17-6.90	850	600	M4	9.8”	0.43”	0.66”	1.55”	17.5 oz	1/4 Hex”

KFS-30 Cordless Driver (Prewinder)

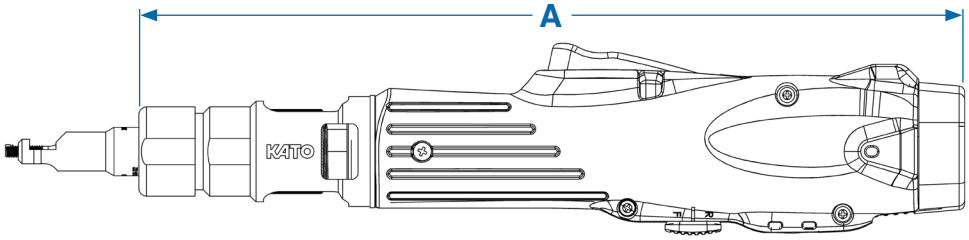

Torque (lbf-in)	Rpm @ 30VDC	Rpm @ 20VDC	Tap Capacity	Length A	Grip Diameter	Weight	Chuck Capacity
0.17-6.90	1000	600	M4	9.8”	1.55”	17.5 oz	1/4 Hex”

KFS-30B Li-Ion Battery

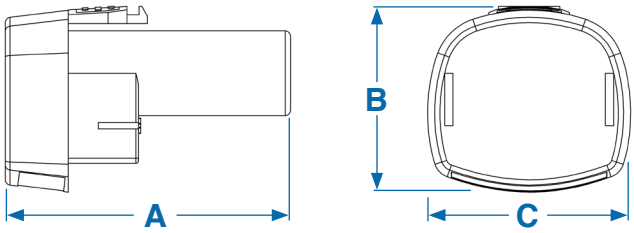

Batteries Included	Rechargeable	Voltage	Output	Length A	Height B	Width C	Weight (Ref.)
2	Yes	7.2V	21.6Wh	M4	11.5	1.3”	16 oz

KFS-30C Battery Charger

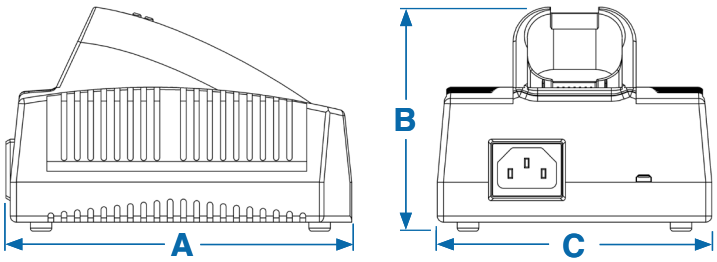

Maximum # of Battery	Input	Output	Length A	Height B	Width C	Weight (Ref.)
1	100 VAC	8.4 VDC	11.5	1.3”	16.5 oz	16 oz

KFS-30 Cordless Driver Dimensions

Prewinder Electric Tool

Thread Size	Length A	Length B	Diameter C	Diameter D
Unified Coarse				
2-56	1.44	0.95	0.22	0.39
4-40	1.44	0.96	0.25	0.39
6-32	1.45	1.10	0.28	0.50
8-32	1.44	0.90	0.25	0.39
10-24	1.75	1.20	0.37	0.50
1/4-20	1.45	1.45	0.42	0.62
Unified Fine				
10-32	1.43	0.90	0.36	0.50
1/4-28	1.45	1.45	0.42	0.62
Metric Coarse				
M2.5X0.45	1.45	0.90	0.22	0.39
M3X0.5	1.45	0.91	0.25	0.39
M4X0.7	1.46	0.90	0.32	0.50
M5X0.8	1.57	1.00	0.37	0.50
M6X1	1.45	1.45	0.42	0.62

Tangless - 2KPE

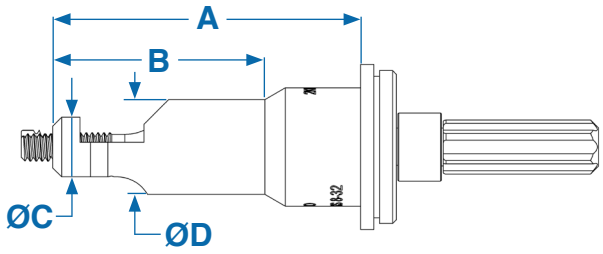

Tanged - KPE

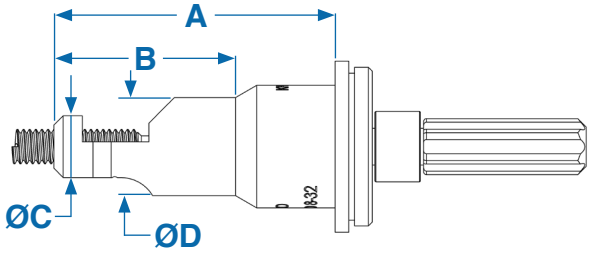

Hex Electric Tool

Thread Size	2KHE - Tangless			KHE - Tanged	
	Length A	Diameter B	Diameter C	Length A	Diameter B
Unified Coarse					
1-64	2.35	0.14	0.18	---	---
2-56	3.10	0.24	0.37	3.83	0.28
4-40	3.10	0.24	0.37	3.62	0.28
6-32	3.00	0.38	0.37	3.00	0.31
8-32	3.10	0.32	0.37	2.99	0.31
10-24	3.00	0.38	0.37	4.06	0.38
12-24	----	----	----	4.06	0.38
1/4-20	3.00	0.37	0.44	3.06	0.45
Unified Fine					
10-32	3.10	0.38	0.44	3.61	0.38
Metric Coarse					
M2X0.4	2.35	0.14	0.18	---	---
M2.5X0.45	2.65	0.24	0.37	3.00	0.26
M3X0.5	2.70	0.24	0.37	3.00	0.25
M4X0.7	3.10	0.24	0.37	2.99	0.32
M5X0.8	3.10	0.24	0.37	4.00	0.38
M6X1	3.10	0.44	0.44	4.14	0.44

Tangless - 2KHE

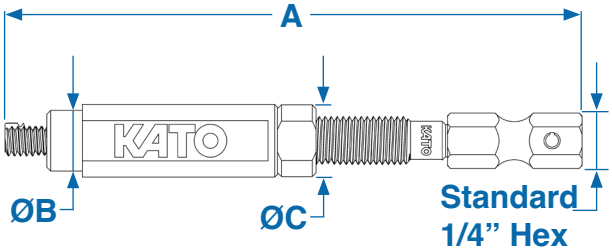

Tanged - KHE

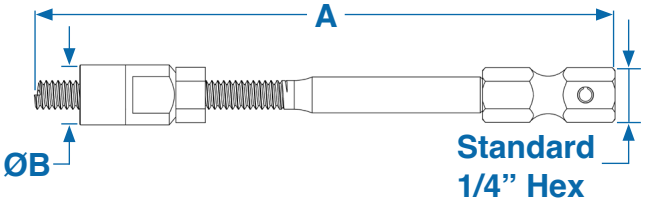

KFS-30 Cordless Driver (Prewinder Part Numbers)

Thread Size[1]	Tangless Front End Assembly	Tangless Replacement Mandrel	Tangless Replacement Pawl	Tanged Front End Assembly	Tanged Replacement Mandrel	Cordless Driver	Prewinder Adapter
Unified Coarse							
2-56	2KPEC-02	2KPEC-02M	2KIPC-02	KPEC-02	KPEC-02M	CT5430[2]	CT5430-PA
4-40	2KPEC-04	2KPEC-04M	2KIPC-04	KPEC-04	KPEC-04M		
6-32	2KPEC-06	2KPEC-06M	2KIPC-06	KPEC-06	KPEC-06M		
8-32	2KPEC-2	2KPEC-2M	2KIPC-2	KPEC-2	KPEC-2M		
10-24	2KPEC-3	2KPEC-3M	2KIPC-3	KPEC-3	KPEC-3M		
1/4-20	2KPEC-4	2KPEC-4M	2KIPC-4	KPEC-4	KPEC-4M		
Unified Fine							
10-32	2KPEF-3	2KPEF-3M	2KIPF-3	KPEF-3	KPEF-3M	CT5430[2]	CT5430-PA
1/4-28	2KPEF-4	2KPEF-4M	2KIPF-4	KPEF-4	KPEF-4M		
Metric Coarse							
M2.5X0.45	2KPEM-2.5	2KPEM-2.5M	2KIPM-2.5	KPEM-2.5	KPEM-2.5M	CT5430[2]	CT5430-PA
M3X0.5	2KPEM-3	2KPEM-3M	2KIPM-3	KPEM-3	KPEM-3M		
M4X0.7	2KPEM-4	2KPEM-4M	2KIPM-4	KPEM-4	KPEM-4M		
M5X0.8	2KPEM-5	2KPEM-5M	2KIPM-5	KPEM-5	KPEM-5M		
M6X1	2KPEM-6	2KPEM-6M	2KIPM-6	KPEM-6	KPEM-6M		

1. The Front End Assembly is designed to work with 1, 1.5, and 2 Dia inserts, for 2.5 and 3 Dia inserts please contact KATO for availability.

2. Use CT5430-EU for European Model. CT5430-UK for United Kingdom Model.

Replacement Parts	
Suffix	Description
D	Prewinder Body
K	Pawl Kit (add a K to the end of the pawl part number; includes one pawl, two pins, and two springs)
M	Mandrel Assembly (Tangless mandrel includes, pawl, pin, and spring fully assembled and ready for use)
S	Spacer Set (includes three spacers, one thick shim and three thin shims)

KFS-30 Cordless Driver (Hex Part Numbers)

Thread Size	Tangless Hex Tool[1]	Tangless Replacement Mandrel	Tangless Replacement Pawl	Tanged Hex Tool	Cordless Driver
Unified Coarse					
1-64	2KHEC-01	2KHEC-01M	2KIPC-01	---	CT5430[3]
2-56	2KHEC-02	2KHEC-02M	2KIPC-02	KHEC-02	
4-40	2KHEC-04	2KHEC-04M	2KIPC-04	KHEC-04	
6-32	2KHEC-06	2KHEC-06M	2KIPC-06	KHEC-06	
8-32	2KHEC-2	2KHEC-2M	2KIPC-2	KHEC-2	
10-24	2KHEC-3	2KHEC-3M	2KIPC-3	KHEC-3	
1/4-20	2KHEC-4	2KHEC-4M	2KIPC-4	KHEC-4	
Unified Fine[2]					
10-32	2KHEF-F3	2KHEF-F3M	2KIPF-3	KHEF-3	CT5430[3]
	2KHEF-L3	2KHEF-L3M			
Metric Coarse[2]					
M2X0.4	2KHEM-F2	2KHEM-F2M	2KIPM-2	---	CT5430[3]
	2KHEM-L2	2KHEM-L2M			
M2.5X0.45	2KHEM-F2.5	2KHEM-F2.5M	2KIPM-2.5	KHEM-2.5	
	2KHEM-L2.5	2KHEM-L2.5M			
M3X0.5	2KHEM-F3	2KHEM-F3M	2KIPM-3	KHEM-3	
	2KHEM-L3	2KHEM-L3M			
M4X0.7	2KHEM-F4	2KHEM-F4M	2KIPM-4	KHEM-4	
	2KHEM-L4	2KHEM-L4M			
M5X0.8	2KHEM-F5	2KHEM-F5M	2KIPM-5	KHEM-5	
	2KHEM-L5	2KHEM-L5M			
M6X1	2KHEM-F6	2KHEM-F6M	2KIPM-6	KHEM-6	
	2KHEM-L6	2KHEM-L6M			

1. The Hex Electric tool consists of the installation mandrel (hex shaft), installation pawl, spring, pin, wrenches, and adjusting sleeve fully assembled and ready for use.
2. For improved Tangless installation UNF & Metric thread sizes use a different installation mandrel for Free-Running & Locking CoilThread inserts, this is indicated by the –F and –L designation in the part number. **KATO strongly recommends using the Prewinder Electric Tool (KPE Series) for Fine and Metric thread sizes.**
3. **Use CT5430-EU for European Model. CT5430-UK for United Kingdom Model.**

Tangless Replacement Parts	
Suffix	Description
K	Pawl Kit (add a K to the end of the pawl part number; includes one pawl, two pins, and two springs)
G	Nylon Guard **(example: 2KHEC-04G)**
H	Housing **(example: 2KHEC-04H)**

KFS-20 Brushless Driver

The **KFS-20 Brushless Driver** is designed for medium to high volume users of KATO Tangless and tanged CoilThread inserts. The KFS-20's brushless motor requires less maintenance - no carbon brushes to purchase or replace.

The KFS-20 is powerful enough to install inserts up to 1/4" and M6, yet sensitive enough to install inserts as small as 2-56 and M2.5. In addition, the KFS-20 is auto-reversing; once the insert is installed the driver will automatically reverse minimizing overall installation time. The KFS-20 utilizes two interchangeable compression springs to allow operators to precisely adjust the torque to ensure consistent installation and prolong the life of the installation tool.

The KFS-20 is designed to install both strip-feed packaged inserts (when used with the KATO Prewinder Electric Tool - KPE series on page 67) and bulk packaged inserts (when used with the KATO Hex Electric Tool - KHE series on page 68).

Features and Benefits

- Lower cost than competitive drivers with greater capability and ease of use.
- Works with Tangless and tanged CoilThread inserts.
- Installs inserts up to 1/4" and M6.
- Auto-Reversing for reduced installation time.
- Quick-Disconnect keyless chuck system (KHE series).
- Fast, clean and quiet (ideal for clean room operation).
- Highly adjustable torque ensures reliable installation and helps prolong the life of installation tools.
- 100% compatible with existing KATO Prewinder Electric tools (KPE Series).
- 100% compatible with existing KATO Hex Electric tools (KHE Series).
- Brushless motor provides increased durability and less maintenance.

Shown with **KATO Linear Torque Arm (2KLRM-1)** see page 78

How to Order

Prewinder Electric Complete tool requires the following parts:

- KFS-20 (CT5420) Includes power supply.
- KATO Prewinder Electric tool (See page 67) - Requires CT5420-PA.
- KATO also recommends using the KATO Linear Torque Arm (See page 78).

Hex Electric Complete tool requires the following parts:

- KFS-20 (CT5420) Includes power supply.
- KATO Hex Electric tool (See page 68).

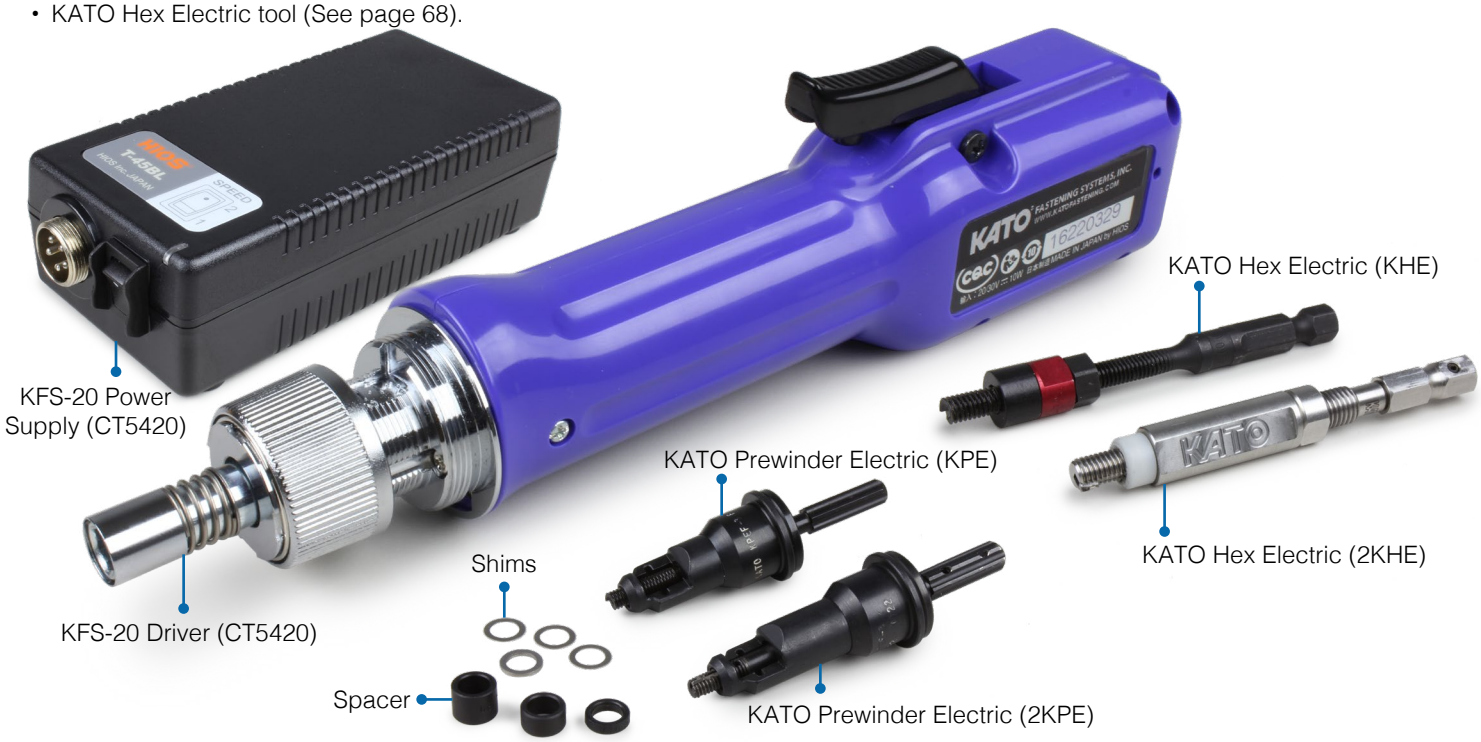

KFS-20 Brushless Driver - Dimensions

KFS-20 Electric Driver

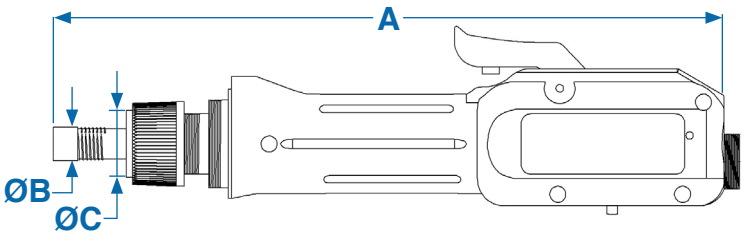

Torque (lbf-in)	Rpm @ 30VDC	Rpm @ 20VDC	Tap Capacity	Length A	Diameter B	Diameter C	Grip Diameter	Weight	Hex Drive	Voltage
0.17-6.90	1000	690	M4	8.5”	0.428”	1.1”	1.3”	12.8 oz	1/4”	20-30 VDC

KFS-20 Electric Driver (Prewinder)

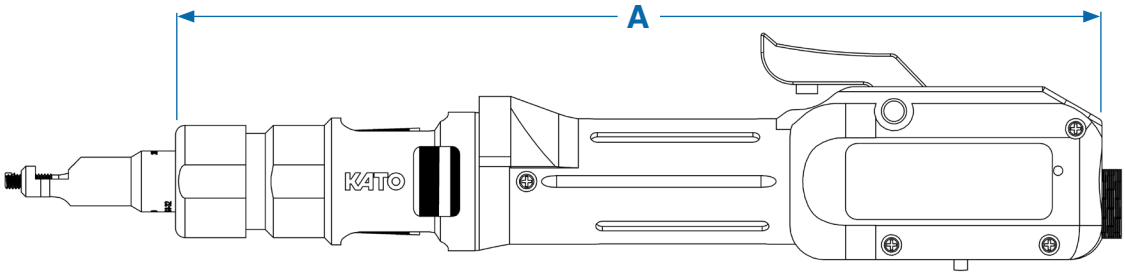

Torque (lbf-in)	Rpm @ 30VDC	Rpm @ 20VDC	Tap Capacity	Length A	Grip Diameter	Weight	Chuck Capacity	Voltage
0.26-6.93	750	480	M4	11.5	1.3”	16.5 oz	1/4 Hex”	20-30 VDC

Power Supply (KFS-20)

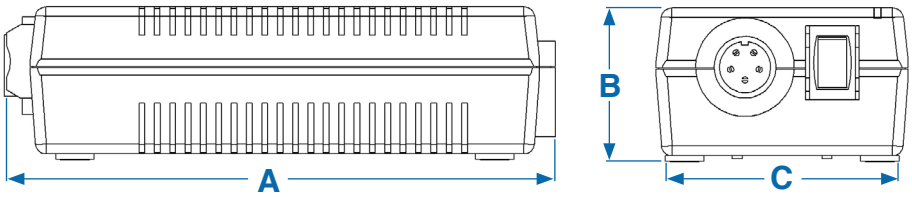

Model	Part Number	Maximum # of Driver	Control Box	Input	Output	Size Reference			Weight
						Length A	Height B	Width C	
U.S.	CT5420	1	Built In	110 VAC	20 VDC/ 30 VDC	5.7”	1.6”	2.6”	11.5 oz
European	CT5420-EU	1	Built In	240 VAC	20 VDC/ 30 VDC	5.7”	1.6”	2.6”	11.5 oz

KFS-20 Brushless Driver - Dimensions

Prewinder Electric Tool

Thread Size	Length A	Length B	Diameter C	Diameter D
Unified Coarse				
2-56	1.44	0.95	0.22	0.39
4-40	1.44	0.96	0.25	0.39
6-32	1.45	1.10	0.28	0.50
8-32	1.44	0.90	0.25	0.39
10-24	1.75	1.20	0.37	0.50
1/4-20	1.45	1.45	0.42	0.62
Unified Fine				
10-32	1.43	0.90	0.36	0.50
1/4-28	1.45	1.45	0.42	0.62
Metric Coarse				
M2.5X0.45	1.45	0.90	0.22	0.39
M3X0.5	1.45	0.91	0.25	0.39
M4X0.7	1.46	0.90	0.32	0.50
M5X0.8	1.57	1.00	0.37	0.50
M6X1	1.45	1.45	0.42	0.62

Tangless - 2KPE

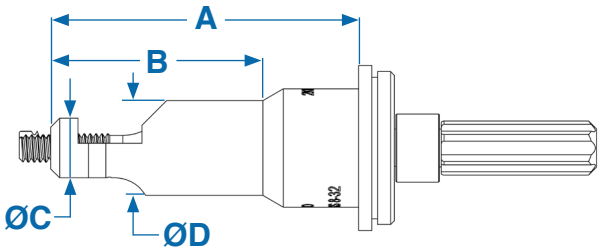

Tanged - KPE

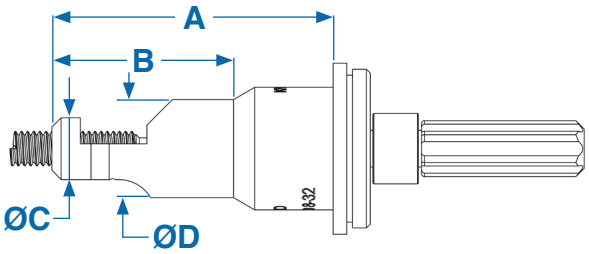

Hex Electric Tool

Thread Size	2KHE - Tangless			KHE - Tanged	
	Length A	Diameter B	Diameter C	Length A	Diameter B
Unified Coarse					
2-56	3.10	0.24	0.37	3.83	0.28
4-40	3.10	0.24	0.37	3.62	0.28
6-32	3.00	0.38	0.37	3.00	0.31
8-32	3.10	0.32	0.37	2.99	0.31
10-24	3.00	0.38	0.37	4.06	0.38
12-24	----	----	----	4.06	0.38
1/4-20	3.10	0.37	0.44	3.06	0.45
Unified Fine					
10-32	3.11	0.38	0.44	3.61	0.38
Metric Coarse					
M2.5X0.45	2.65	0.24	0.37	3.00	0.26
M3X0.5	2.70	0.24	0.37	3.00	0.25
M4X0.7	3.10	0.24	0.37	2.99	0.32
M5X0.8	3.10	0.24	0.37	4.00	0.38
M6X1	3.10	0.44	0.44	4.14	0.44

Tangless - 2KHE

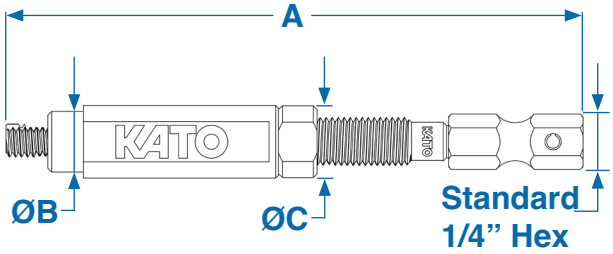

Tanged - KHE

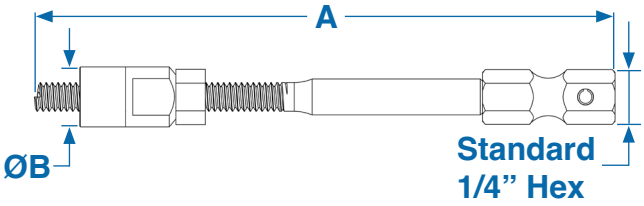

KFS-20 Brushless Driver - Prewinder Part Numbers

Thread Size[1]	Tangless Front End Assembly	Tangless Replacement Mandrel	Tangless Replacement Pawl	Tanged Front End Assembly	Tanged Replacement Mandrel	Brushless Driver w/ Power Supply	Prewinder Adapter
Unified Coarse							
2-56	2KPEC-02	2KPEC-02M	2KIPC-02	KPEC-02	KPEC-02M	CT5420[2]	CT5420-PA
4-40	2KPEC-04	2KPEC-04M	2KIPC-04	KPEC-04	KPEC-04M		
6-32	2KPEC-06	2KPEC-06M	2KIPC-06	KPEC-06	KPEC-06M		
8-32	2KPEC-2	2KPEC-2M	2KIPC-2	KPEC-2	KPEC-2M		
10-24	2KPEC-3	2KPEC-3M	2KIPC-3	KPEC-3	KPEC-3M		
1/4-20	2KPEC-4	2KPEC-4M	2KIPC-4	KPEC-4	KPEC-4M		
Unified Fine							
10-32	2KPEF-3	2KPEF-3M	2KIPF-3	KPEF-3	KPEF-3M	CT5420[2]	CT5420-PA
1/4-28	2KPEF-4	2KPEF-4M	2KIPF-4	KPEF-4	KPEF-4M		
Metric Coarse							
M2.5X0.45	2KPEM-2.5	2KPEM-2.5M	2KIPM-2.5	KPEM-2.5	KPEM-2.5M	CT5420[2]	CT5420-PA
M3X0.5	2KPEM-3	2KPEM-3M	2KIPM-3	KPEM-3	KPEM-3M		
M4X0.7	2KPEM-4	2KPEM-4M	2KIPM-4	KPEM-4	KPEM-4M		
M5X0.8	2KPEM-5	2KPEM-5M	2KIPM-5	KPEM-5	KPEM-5M		
M6X1	2KPEM-6	2KPEM-6M	2KIPM-6	KPEM-6	KPEM-6M		

1. The Front End Assembly is designed to work with 1, 1.5, and 2 Dia inserts, for 2.5 and 3 Dia inserts please contact KATO for availability.

2. Use CT5420-EU for European Model.

Replacement Parts	
Suffix	Description
D	Prewinder Body
K	Pawl Kit (add a K to the end of the pawl part number; includes one pawl, two pins, and two springs)
M	Mandrel Assembly (Tangless mandrel includes, pawl, pin, and spring fully assembled and ready for use)
S	Spacer Set (includes three spacers, one thick shim and three thin shims)

KFS-20 Brushless Driver - Hex Part Numbers

Thread Size	Tangless Hex Tool[1]	Tangless Replacement Mandrel	Tangless Replacement Pawl	Tanged Hex Tool	Brushless Driver w/ Power Supply
Unified Coarse					
2-56	2KHEC-02	2KHEC-02M	2KIPC-02	KHEC-02	CT5420[3]
4-40	2KHEC-04	2KHEC-04M	2KIPC-04	KHEC-04	
6-32	2KHEC-06	2KHEC-06M	2KIPC-06	KHEC-06	
8-32	2KHEC-2	2KHEC-2M	2KIPC-2	KHEC-2	
10-24	2KHEC-3	2KHEC-3M	2KIPC-3	KHEC-3	
1/4-20	2KHEC-4	2KHEC-4M	2KIPC-4	KHEC-4	
Unified Fine[2]					
10-32	2KHEF-F3	2KHEF-F3M	2KIPF-3	KHEF-3	CT5420[3]
	2KHEF-L3	2KHEF-L3M			
Metric Coarse[2]					
M2.5X0.45	2KHEM-F2.5	2KHEM-F2.5M	2KIPM-2.5	KHEM-2.5	CT5420[3]
	2KHEM-L2.5	2KHEM-L2.5M			
M3X0.5	2KHEM-F3	2KHEM-F3M	2KIPM-3	KHEM-3	
	2KHEM-L3	2KHEM-L3M			
M4X0.7	2KHEM-F4	2KHEM-F4M	2KIPM-4	KHEM-4	
	2KHEM-L4	2KHEM-L4M			
M5X0.8	2KHEM-F5	2KHEM-F5M	2KIPM-5	KHEM-5	
	2KHEM-L5	2KHEM-L5M			
M6X1	2KHEM-F6	2KHEM-F6M	2KIPM-6	KHEM-6	
	2KHEM-L6	2KHEM-L6M			

1. The Hex Electric tool consists of the installation mandrel (hex shaft), installation pawl, spring, pin, wrenches, and adjusting sleeve fully assembled and ready for use.
2. For improved Tangless installation UNF & Metric thread sizes use a different installation mandrel for Free-Running & Locking CoilThread inserts, this is indicated by the –F and –L designation in the part number. **KATO strongly recommends using the Prewinder Electric Tool (KPE Series) for Fine and Metric thread sizes.**
3. **Use CT5420-EU for European Model.**

KFS-25 Brushless Driver

The **KFS-25 Brushless Driver** is designed for low to medium volume users of KATO Tangless and tanged bulk packaged CoilThread inserts. The KFS-25's brushless motor requires less maintenance - no carbon brushes to purchase or replace.

The KFS-25 is powerful enough to install inserts up to 1/2" and M12, yet sensitive enough to install inserts as small as 6-32 and M4. In addition, the KFS-25 is auto-reversing; once the insert is installed the driver will automatically reverse minimizing overall installation time. The KFS-25 allows operators to precisely adjust the torque to ensure consistent installation and prolong the life of the installation tool.

The KFS-25 is designed to be used with the KATO Hex Electric Tool (KHE series on page 71) and incorporates a 1/4" quick-disconnect keyless chuck system. Operators can quickly and easily change from one thread size to another, or between Tangless and tanged CoilThread inserts.

Features and Benefits

- Lower cost than competitive drivers with greater capability and ease of use.
- Works with Tangless and tanged CoilThread inserts.
- 100% compatible with existing KATO Hex Electric tools (KHE Series).
- Auto-Reversing for reduced installation time.
- Quick-Disconnect keyless chuck system.
- Fast, Clean and quiet (ideal for clean room operation).
- Adjustable torque, helps prolong the life of installation tools.
- Brushless motor provides increased durability and less maintenance.

Shown with **KATO Linear Torque Arm (2KLRM-1)** see page 78

How to Order - **Complete tool requires the following parts:**

- KFS-25 (CT5425) - Includes Power Supply.
- KATO Hex Electric tool (See page 71).
- KATO also recommends using the KATO Linear Torque Arm (See page 78).

KFS-25 Brushless Driver - Dimensions

KFS-25 Electric Driver

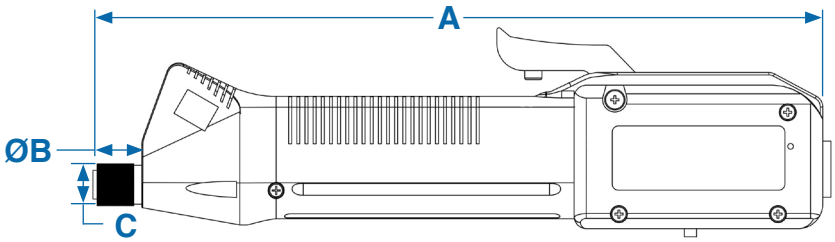

Torque (lbf-in)	Rpm @ 30VDC	Rpm @ 20VDC	Length A	Diameter B	Length C	Grip Diameter	Weight	Hex Drive	Voltage
4.4-17.7	730	490	9.05”	0.51”	0.60”	1.49”	14.4 oz	1/4”	20-30 VDC

Power Supply (KFS-25)

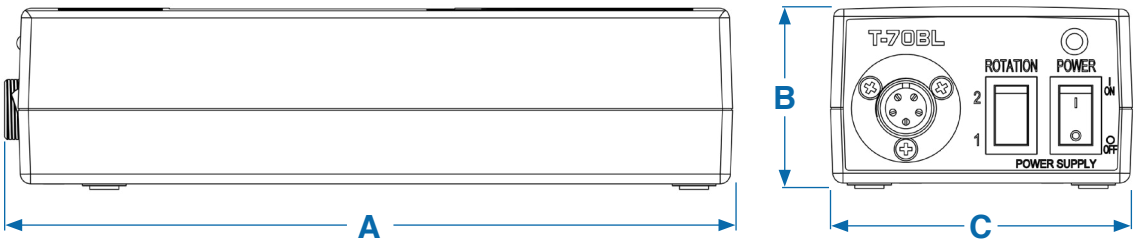

Model	Part Number	Maximum # of Driver	Control Box	Input	Output	Size Reference			Weight
						Length A	Height B	Width C	
U.S.	CT5425	1	Built In	110 VAC	20 VDC/ 30 VDC	8.19”	1.93”	3.31”	24 oz
European	CT5425-EU	1	Built In	240 VAC	20 VDC/ 30 VDC	8.19”	1.93”	3.31”	24 oz

KATO Hex Electric

Thread Size	2KHE - Tangless			KHE - Tanged	
	Length A	Diameter B	Diameter C	Length A	Diameter B
Unified Coarse					
6-32	3.00	0.38	0.37	3.00	0.31
8-32	3.10	0.32	0.37	2.99	0.31
10-24	3.00	0.38	0.37	4.06	0.38
12-24	----	----	----	4.06	0.38
1/4-20	3.10	0.37	0.44	3.06	0.45
5/16-18	3.51	0.54	0.54	3.00	0.56
3/8-16	3.68	0.54	0.54	4.00	0.56
Unified Fine					
10-32	3.10	0.38	0.44	3.61	0.38
Metric Coarse					
M4X0.7	3.10	0.24	0.37	2.99	0.32
M5X0.8	3.10	0.24	0.37	4.00	0.38
M6X1	3.10	0.44	0.44	4.14	0.44
M8X1.25	3.88	0.51	0.51	3.04	0.56
M10X1.5	4.11	0.61	0.61	---	---
M12X1.75	4.51	0.69	0.69	---	---

Tangless - 2KHE

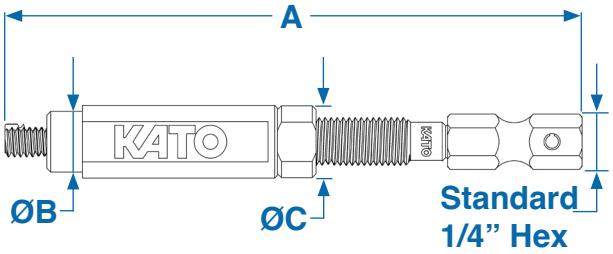

Tanged - KHE

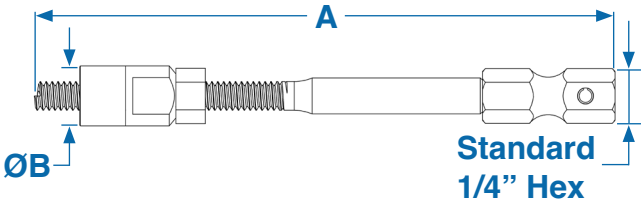

1. All dimensions are for reference only.
2. All dimensions are in inches.

KFS-25 Brushless Driver - Part Numbers

Thread Size	Tangless Hex Tool[1]	Tangless Replacement Mandrel	Tangless Replacement Pawl	Tanged Hex Tool	Brushless Driver w/ Power Supply
Unified Coarse					
6-32	2KHEC-06	2KHEC-06M	2KIPC-06	KHEC-06	CT5425[4]
8-32	2KHEC-2	2KHEC-2M	2KIPC-2	KHEC-2	
10-24	2KHEC-3	2KHEC-3M	2KIPC-3	KHEC-3	
12-24	---	---	---	KHEC-1	
1/4-20	2KHEC-4	2KHEC-4M	2KIPC-4	KHEC-4	
5/16-18	2KHEC-5	2KHEC-5M	2KIPC-5	---	CT5425[4]
3/8-16	2KHEC-6	2KHEC-6M	2KIPC-6	---	
Unified Fine[2]					
10-32	2KHEF-F3	2KHEF-F3M	2KIPF-3	KHEF-3	CT5425[4]
	2KHEF-L3	2KHEF-L3M			
Metric Coarse[2]					
M4X0.7	2KHEM-F4	2KHEM-F4M	2KIPM-4	KHEM-4	CT5425[4]
	2KHEM-L4	2KHEM-L4M			
M5X0.8	2KHEM-F5	2KHEM-F5M	2KIPM-5	KHEM-5	
	2KHEM-L5	2KHEM-L5M			
M6X1	2KHEM-F6	2KHEM-F6M	2KIPM-6	KHEM-6	
	2KHEM-L6	2KHEM-L6M			
M8x1.25[3]	2KHEM-F8	---	See Notes[3]	KHEM-8	
	2KHEM-L8	---			
M10x1.5[3]	2KHEM-F10	---	See Notes[3]	---	
	2KHEM-L10	---			
M12X1.75[3]	2KHEM-F12	---	See Notes[3]	---	
	2KHEM-L12	---			

1. The Hex Electric tool consists of the installation mandrel (hex shaft), installation pawl, spring, pin, wrenches, and adjusting sleeve fully assembled and ready for use.
2. For improved Tangless installation UNF & Metric thread sizes use a different installation mandrel for Free-Running & Locking CoilThread inserts, this is indicated by the –F and –L designation in the part number. **KATO strongly recommends using the Prewinder Electric Tool (KPE Series) for Fine and Metric thread sizes.**
3. Not compatible with the KATO One Pawl Fits All system at this time.
4. **Use CT5425-EU for European Model.**

Tangless Replacement Parts	
Suffix	Description
K	Pawl Kit (add a K to the end of the pawl part number; includes one pawl, two pins, and two springs)
G	Nylon Guard **(example: 2KHEC-04G)**
H	Housing **(example: 2KHEC-04H)**

Prewinder Air Tool

The **KATO Prewinder Air (KPA)** installation tool is designed for medium to high volume users of KATO Tangless and tanged strip-feed packaged CoilThread inserts (can also be used with bulk inserts). The KPA tool is comprised of the KATO Air Motor (CT25017), a KATO Adapter (CT9605 or CT9705), and a Front End Assembly (see table on page 76).

Another important component to the air tool system is the KATO Filter-Regulator-Lubricator (2KFRL-1). The Filter-Regulator-Lubricator cleans the air, allows precise control of the air pressure, and lubricates the air motor. When used together, the KPA tool is capable of installing KATO CoilThread inserts up to 1/2" and M12 coarse and fine thread sizes.

For installation of Tangless CoilThread insert sizes 2-56, 4-40, M2.5, and M3, the KATO torque limiting Clutch Drive (CT9602) is required to control the installation torque generated by the air motor; preventing damage to the Front-End Assembly.

Features and Benefits

- Available for both Tangless and tanged CoilThread inserts.
- Installs inserts up to 1/2" and M12.
- Semi-automated reversing for reduced installation time.
- Utilizes KATO's One Pawl Fits All system (Tangless).

Shown with **KATO Linear Arm Tool Holder (2KLRM-1 with optional air tool kit)** see page 79

How to Order - **Complete tool requires the following parts:**

- Air Motor (CT25017).
- Adapter (CT9605 or CT9705 see table for details).
- Front-End Assembly (see table on page 76) .
- Filter-Regulator-Lubricator (2KFRL-1).
- Torque Limiting Clutch Drive (CT9602) required for Tangless sizes 2-56, 4-40, M2.5, and M3.

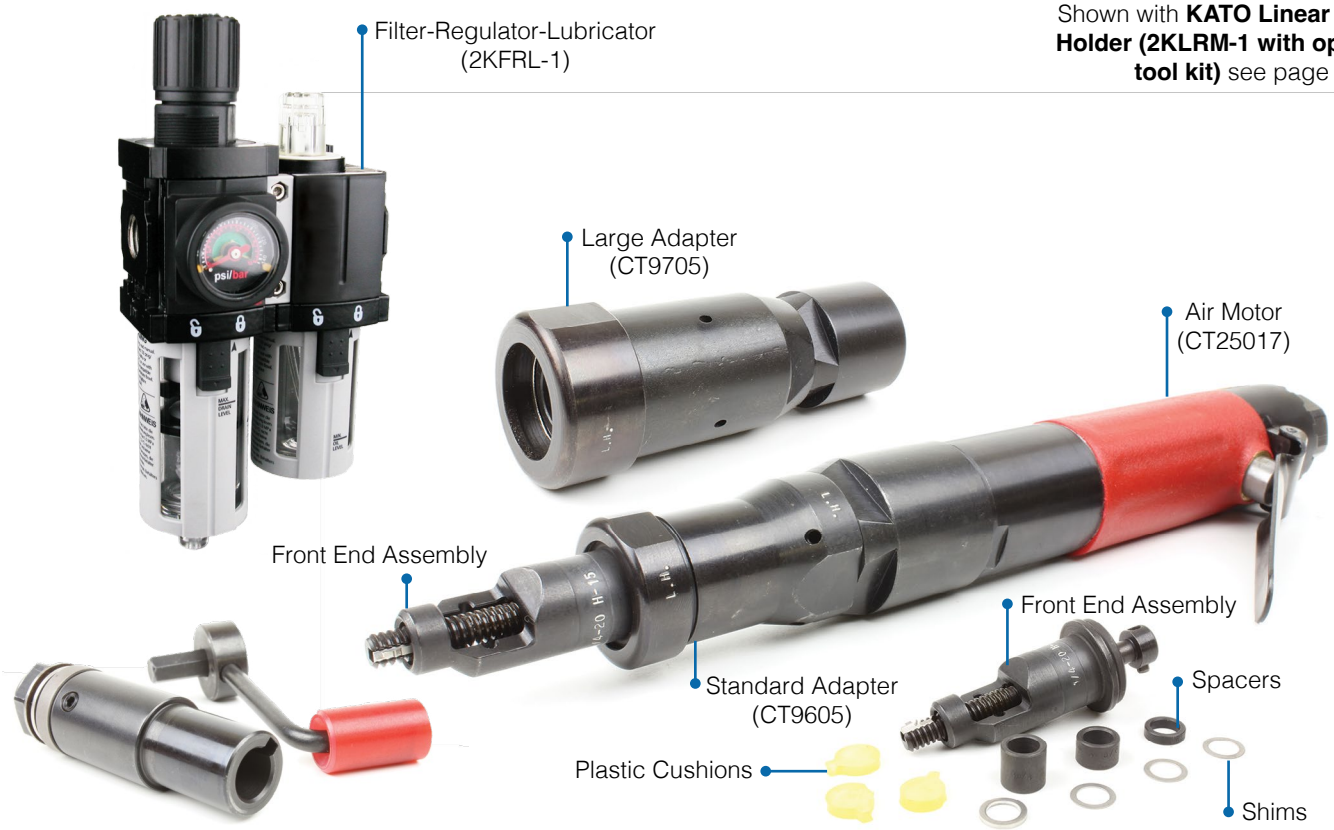

Torque Limiting Clutch Drive - CT9602
Required for Tangless Size
2-56, 4-40, M2.5, and M3.

CT25017 (Standard Adapter CT9605)

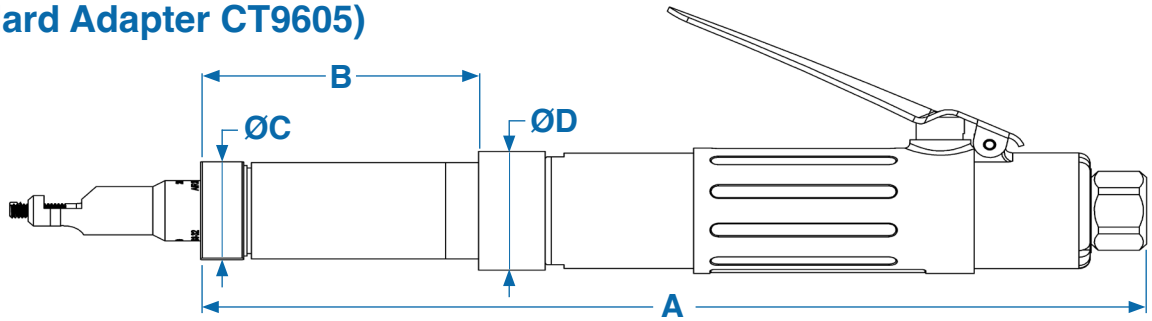

Length A	Length B	Diameter C	Diameter D	Max RPM at 90 PSI	Adapter Weight	Weight Air Motor	Air Motor Torque[2]	Weight Complete Tool	Hose Fitting
8.5	3.00	1.10	1.25	1500	0.44 lb	0.84 lb	0.9188	1.4 lb	1/4” NPT

1. Dimensions listed are for a standard length front end assembly (1, 1.5, & 2 Diameter).
2. Torque (lbf-ft) is calculated based on 14hp @ 800 rpm.
3. All dimensions are in inches and for reference only.

CT25017 (Large Adapter CT9705)

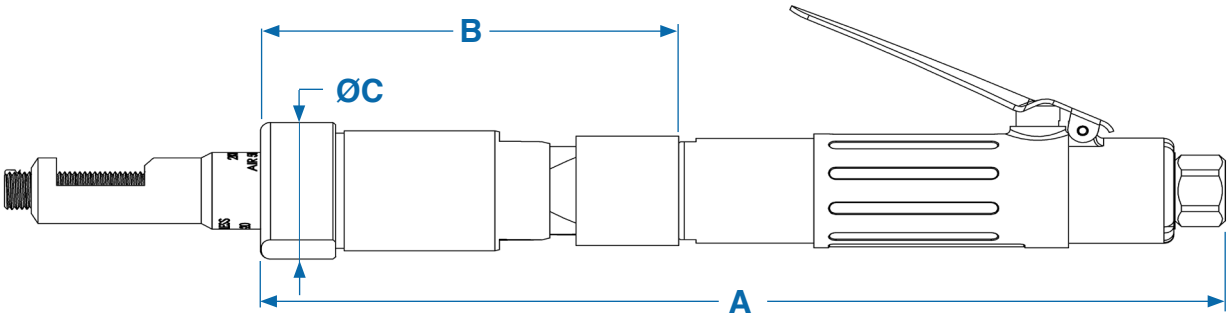

Length A	Length B	Diameter C	Max RPM at 90 PSI	Adapter Weight	Weight Air Motor	Air Motor Torque[2]	Weight Complete Tool	Hose Fitting
9.5	4.00	1.55	1500	1.01 lb	0.84 lb	0.9188	2 lb	1/4” NPT

1. Dimensions listed are for a standard length front end assembly (1, 1.5, & 2 Diameter).
2. Torque (lbf-ft) is calculated based on 14hp @ 800 rpm.
3. All dimensions are in inches and for reference only.

CT9602

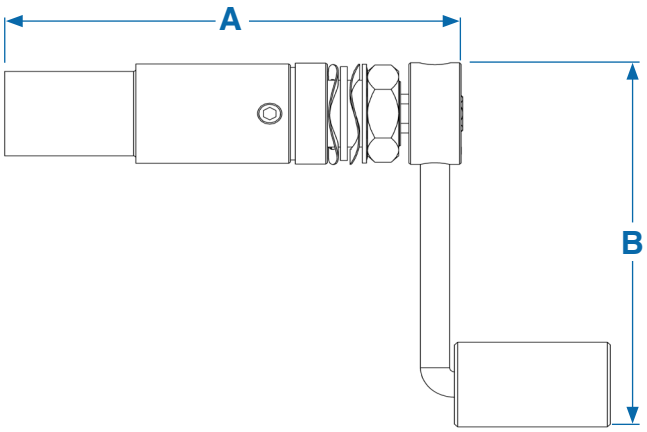

Length A	Length B	Weight
2.5	2.5	.26 lb

1. All dimensions are in inches and for reference only.

Prewinder Air Tool - Dimensions

Tangless - 2KPA (smaller sizes)

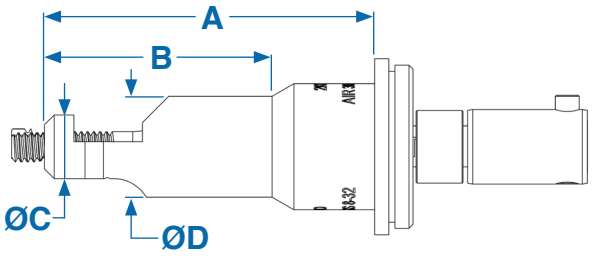

Tangless - 2KPA (larger sizes)

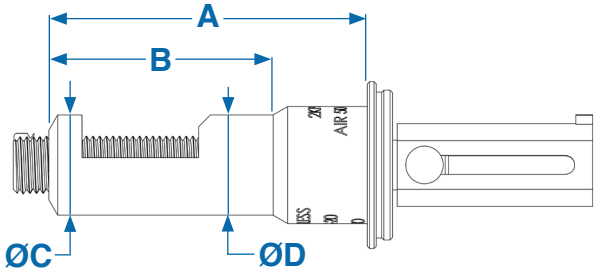

Tanged - KPA (smaller sizes)

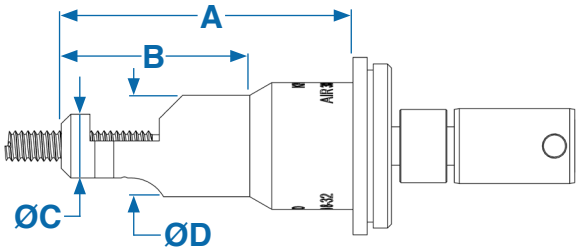

Tanged - KPA (larger sizes)

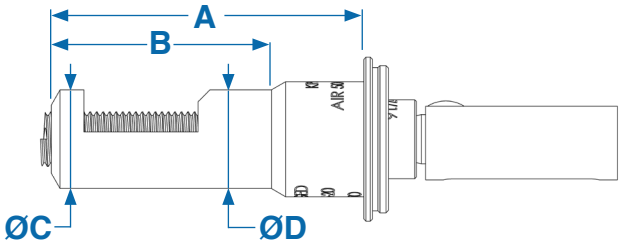

Thread Size	Length A	Length B	Diameter C	Diameter D	Weight
Unified Coarse					
2-56	1.44	0.97	0.21	0.39	0.10
4-40	1.44	1.09	0.24	0.39	0.10
6-32	1.64	1.25	0.28	0.50	0.14
8-32	1.64	1.05	0.28	0.50	0.12
10-24	1.73	1.34	0.37	0.51	0.13
1/4-20	1.44	1.44	0.42	0.63	0.12
5/16-18	1.70	1.25	0.56	0.75	0.26
3/8-16	2.00	2.01	0.62	0.86	0.34
7/16-14	2.69	1.75	0.75	0.75	0.35
1/2-13	2.84	1.97	0.88	0.88	0.43
Unified Fine					
6-40	1.64	1.03	0.27	0.50	0.10
8-36	1.64	1.05	0.35	0.51	0.10
10-32	1.71	1.02	0.38	0.49	0.12
1/4-28	1.44	1.23	0.43	0.63	0.12
5/16-24	1.58	1.93	0.56	0.75	0.26
3/8-24	1.99	2.04	0.62	0.86	0.35
7/16-20	2.38	1.87	0.75	0.75	0.35
1/2-20	2.68	2.30	0.81	0.81	0.43

Thread Size	Length A	Length B	Diameter C	Diameter D	Weight
Metric Coarse					
M2.5X0.45	1.44	1.47	0.23	0.39	0.10
M3X0.5	1.44	1.38	0.23	0.38	0.10
M3.5X0.6	1.44	1.38	0.37	0.50	0.12
M4X0.7	1.44	1.02	0.35	0.50	0.12
M5X0.8	1.56	1.00	0.37	0.63	0.12
M6X.1	1.65	1.48	0.44	0.63	0.14
M7X1	1.79	1.48	0.43	0.63	0.14
M8X1.25	1.79	1.33	0.53	0.75	0.27
M10X1.5	2.20	2.15	0.88	0.88	0.34
M12X1.75	2.60	2.28	0.81	0.81	0.37
Metric Fine					
M8X1	1.91	1.326	0.56	0.56	0.27
M10X1	2.20	2.152	0.88	0.88	0.34
M10X1.25	2.20	2.152	0.88	0.88	0.34
M12X1.25	2.70	2.282	0.81	0.81	0.37
M12X1.5	2.70	2.282	0.81	0.81	0.37

1. Dimensions listed are for a standard length front end assembly (1, 1.5, & 2 Diameter).
2. For thread sizes 2-56 to 1/4” and M2.5 to M6 use KATO Adapter CT9605. For thread sizes 5/16” to 1/2” and M8 to M12 use KATO Adapter CT9705.
3. Torque (lbf-ft) is calculated based on 14hp @ 800 rpm.
4. All dimensions are in inches and for reference only.

Filter-Regulator-Lubricator (2KFRL-1)

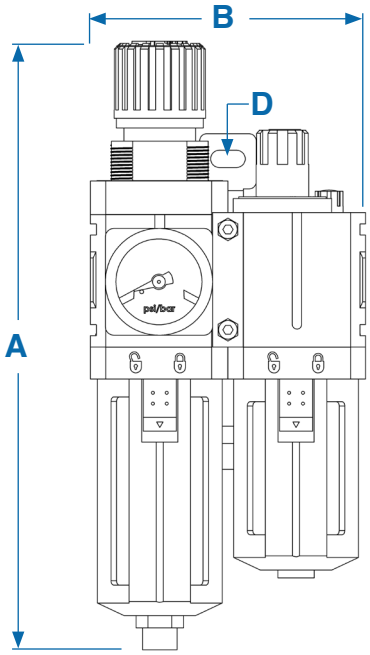

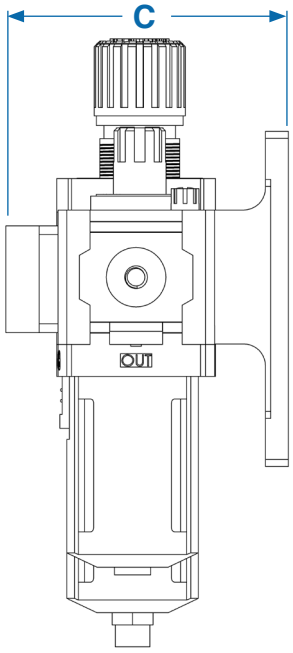

Length A	Length B	Length C	Height D	Thread	Weight
7.8	3	3	.200	1/4” NPT	0.8 lb

1. All dimensions are in inches and for reference only.

PSI Chart

Thread Size	Tangless FEA Part Number	Tangless Max PSI	Tanged FEA Part Number	Tanged Max PSI
Unified Coarse				
2-56	2KPAC-02	15	KPAC-02	20
4-40	2KPAC-04	20	KPAC-04	20
6-32	2KPAC-06	30	KPAC-06	30
8-32	2KPAC-2	30	KPAC-2	40
10-24	2KPAC-3	40	KPAC-3	40
1/4-20	2KPAC-4	45	KPAC-4	45
5/16-18	2KPAC-5	50	KPAC-5	50
3/8-16	2KPAC-6	60	KPAC-6	60
7/16-14	2KPAC-7	60	KPAC-7	60
1/2-13	2KPAC-8	80	KPAC-8	80
Unified Fine				
6-40	---	---	KPAF-06	25
8-36	---	---	KPAF-2	40
10-32	2KPAF-3	30	KPAF-3	40
1/4-28	2KPAF-4	45	KPAF-4	45
5/16-24	2KPAF-5	50	KPAF-5	50
3/8-24	2KPAF-6	60	KPAF-6	60
7/16-20	2KPAF-F7/L7	50	KPAF-7	50
1/2-20	2KPAF-8F/L8	80	KPAF-8	80
Metric Coarse				
M2.5X0.45	2KPAM-2.5	15	KPAM-2.5	20
M3X0.5	2KPAM-3	20	KPAM-3	30
M3.5X0.6	---	---	KPAM-3.5	40
M4X0.7	2KPAM-4	30	KPAM-4	40
M5X0.8	2KPAM-5	30	KPAM-5	40
M6X1	2KPAM-6	40	KPAM-6	45
M7X1	---	---	KPAM-7	45
M8X1.25	2KPAM-8	50	KPAM-8	50
M10X1.5	2KPAM-10	50	KPAM-10	50
M12X1.75	2KPAM-12	60	KPAM-12	60

Prewinder Air Tool - Part Numbers

Thread Size	Tangless Front End Assembly[2]	Tangless Replacement Mandrel	Tangless Replacement Pawl	Tanged Front End Assembly[2]	Tanged Replacement Mandrel	Torque Limiting Clutch Drive	Air Motor	Adapter	Filter Regulator Lubricator
Unified Coarse									
2-56	2KPAC-02	2KPAC-02M	2KIPC-02	KPAC-02	KPAC-02M	CT9602[1]	CT25017	CT9605	2KFRL-1
4-40	2KPAC-04	2KPAC-04M	2KIPC-04	KPAC-04	KPAC-04M				
6-32	2KPAC-06	2KPAC-06M	2KIPC-06	KPAC-06	KPAC-06M	---			
8-32	2KPAC-2	2KPAC-2M	2KIPC-2	KPAC-2	KPAC-2M				
10-24	2KPAC-3	2KPAC-3M	2KIPC-3	KPAC-3	KPAC-3M				
1/4-20	2KPAC-4	2KPAC-4M	2KIPC-4	KPAC-4	KPAC-4M				
5/16-18	2KPAC-5	2KPAC-5M	2KIPC-5	KPAC-5	KPAC-5M			CT9705	
3/8-16	2KPAC-6	2KPAC-6M	2KIPC-6	KPAC-6	KPAC-6M				
7/16-14	2KPAC-7	2KPAC-7M	2KIPC-7	KPAC-7	KPAC-7M				
1/2-13	2KPAC-8	2KPAC-8M	2KIPC-8	KPAC-8	KPAC-8M				
Unified Fine									
6-40	---	---	---	KPAF-06	KPAF-06M	---	CT25017	CT9605	2KFRL-1
8-36	---	---	---	KPAF-2	KPAF-2M				
10-32	2KPAF-3	2KPAF-3M	2KIPF-3	KPAF-3	KPAF-3M				
1/4-28	2KPAF-4	2KPAF-4M	2KIPF-4	KPAF-4	KPAF-4M				
5/16-24	2KPAF-5	2KPAF-5M	2KIPF-5	KPAF-5	KPAF-5M			CT9705	
3/8-24	2KPAF-6	2KPAF-6M	2KIPF-6	KPAF-6	KPAF-6M				
7/16-20[3]	2KPAF-F7	2KPAF-F7M	2KIPF-7	KPAF-7	KPAF-7M				
	2KPAF-L7	2KPAF-L7M							
1/2-20[3]	2KPAF-F8	2KPAF-F8M	2KIPF-8	KPAF-8	KPAF-8M				
	2KPAF-L8	2KPAF-L8M							
Metric Coarse									
M2.5X0.45	2KPAM-2.5	2KPAM-2.5M	2KIPM-2.5	KPAM-2.5	KPAM-2.5M	CT9602[1]	CT25017	CT9605	2KFRL-1
M3X0.5	2KPAM-3	2KPAM-3M	2KIPM-3	KPAM-3	KPAM-3M				
M3.5X0.6	---	---	---	KPAM-3.5	KPAM-3.5M				
M4X0.7	2KPAM-4	2KPAM-4M	2KIPM-4	KPAM-4	KPAM-4M	---			
M5X0.8	2KPAM-5	2KPAM-5M	2KIPM-5	KPAM-5	KPAM-5M				
M6X1	2KPAM-6	2KPAM-6M	2KIPM-6	KPAM-6	KPAM-6M				
M7X1	---	---	---	KPAM-7	KPAM-7M				
M8X1.25	2KPAM-8	2KPAM-8M	2KIPM-8	KPAM-8	KPAM-8M			CT9705	
M10X1.5	2KPAM-10	2KPAM-10M	2KIPM-10	KPAM-10	KPAM-10M				
M12X1.75	2KPAM-12	2KPAM-12M	2KIPM-12	KPAM-12	KPAM-12M				
Metric Fine									
M8X1	---	---	---	KPAM-8X1	KPAM-8X1M	---	CT25017	CT9705	2KFRL-1
M10X1	---	---	---	KPAM-10X1	KPAM-10X1M				
M10X1.25	---	---	---	KPAM-10X1.25	KPAM-10X1.25M				
M12X1.25	---	---	---	KPAM-12X1.25	KPAM-12X1.25M				
M12X1.5	---	---	---	KPAM-12X1.5	KPAM-12X1.5M				

1. The Torque Limiting Clutch Drive must be used with Tangless thread sizes 2-56, 4-40, M2.5 & M3. KATO will not warranty the mandrels or pawls without the use of the Clutch Drive.
2. The Front End Assembly is designed to work with 1, 1.5, and 2 diameter inserts, for 2.5 and 3 diameter inserts, please contact KATO for availability.
3. For improved Tangless installation UNF & Metric thread sizes use a different installation mandrel for Free-Running & Locking CoilThread inserts, this is indicated by the –F and –L designation in the part number.

Replacement Parts	
Suffix	Description
D	Prewinder Body
K	Pawl Kit (add a K to the end of the pawl part number; includes one pawl, two pins, and two springs)
M	Mandrel Assembly (Tangless mandrel includes, pawl, pin, and spring fully assembled and ready for use)
S	Spacer Set (includes three spacers, one thick shim and three thin shims)

Prewinder Air Tool - Cross References

For your convenience, the cross reference table below includes the KATO part number, the superseded KATO part number, and the Heli-Coil part number where applicable.

KATO Part Number	Superseded Part Number	Heli-Coil Part Number
Unified Coarse		
2KPAC-02	2CT11000-02	18551-02-15
2KPAC-02M	2CT11200-02	18551-02-30
2KPAC-04	2CT11000-04	18551-04-15
2KPAC-04M	2CT11200-04	18551-04-30
2KPAC-06	2CT11000-06	18551-06-15
2KPAC-06M	2CT11200-06	18551-06-30
2KPAC-2	2CT11000-2	18551-2-15
2KPAC-2M	2CT11200-2	18551-2-30
2KPAC-3	2CT11000-3	18551-3-15
2KPAC-3M	2CT11200-3	18551-3-30
2KPAC-4	2CT11000-4	18551-4-15
2KPAC-4M	2CT11200-4	18551-4-30
2KPAC-5	2CT11000-5	---
2KPAC-5M	2CT11200-5	---
2KPAC-6	2CT11000-6	---
2KPAC-6M	2CT11200-6	---
Unified Fine		
2KPAF-3	2CT11001-3A	18552-3-15
2KPAF-3M	2CT11201-3A	18552-3-30
2KPAF-4	2CT11001-4	18552-4-15
2KPAF-4M	2CT11201-4	18552-4-30
2KPAF-5	2CT11001-5	---
2KPAF-5M	2CT11201-5	---
2KPAF-6	2CT11001-6	---
2KPAF-6M	2CT11201-6	---
Metric Coarse		
2KPAM-2.5	2CT11000-M2.5	---
2KPAM-2.5M	2CT11200-M2.5	---
2KPAM-3	2CT11000-M3	---
2KPAM-3M	2CT11200-M3	---
2KPAM-4	2CT11000-M4	---
2KPAM-4M	2CT11200-M4	---
2KPAM-5	2CT11000-M5	---
2KPAM-5M	2CT11200-M5	---
2KPAM-6	2CT11000-M6	---
2KPAM-6M	2CT11200-M6	---
2KPAM-8	2CT11000-M8	---
2KPAM-8M	2CT11200-M8	---
2KPAM-10	2CT11000-M10	---
2KPAM-10M	2CT11200-M10	---
2KPAM-12	2CT11000-M12	---
2KPAM-12M	2CT11200-M12	---

KATO Part Number	Superseded Part Number	Heli-Coil Part Number
Unified Coarse		
KPAC-02	CT11000-02	8551-02-15
KPAC-02M	CT11200-02	8553-02
KPAC-04	CT11000-04	8551-04-15
KPAC-04M	CT11200-04	8553-04
KPAC-06	CT11000-06	8551-06-15
KPAC-06M	CT11200-06	8553-06
KPAC-2	CT11000-2	8551-2-15
KPAC-2M	CT11200-2	8553-2
KPAC-3	CT11000-3	8551-3-15
KPAC-3M	CT11200-3	8553-3
KPAC-4	CT11000-4	8551-4-15
KPAC-4M	CT11200-4	8553-4
KPAC-5	CT11000-5	8551-5-15
KPAC-5M	CT11200-5	8253-5
KPAC-6	CT11000-6	8251-6
KPAC-6M	CT11200-6	8253-6
KPAC-7	CT11000-7	8251-7
KPAC-7M	CT11200-7	8253-7
KPAC-8	CT11000-8	8251-8
KPAC-8M	CT11200-8	8253-8
Unified Fine		
KPAF-06	CT11001-06	8552-06
KPAF-06M	CT11201-06	8554-06
KPAF-2	CT11001-2	---
KPAF-2M	CT11201-2	---
KPAF-3	CT11001-3	8552-3-15
KPAF-3M	CT11201-3	8554-3
KPAF-4	CT11001-4	8552-4-15
KPAF-4M	CT11201-4	8554-4
KPAF-5	CT11001-5	8252-5-15
KPAF-5M	CT11201-5	8254-5
KPAF-6	CT11001-6	8252-6
KPAF-6M	CT11201-6	8254-6
KPAF-7	CT11001-7	8252-7
KPAF-7M	CT11201-7	8254-7
KPAF-8	CT11001-8	8252-8
KPAF-8M	CT11201-8	8254-8

KATO Part Number	Superseded Part Number	Heli-Coil Part Number
Metric Coarse		
KPAM-2.5	CT11000-M2.5	8751-2.5
KPAM-2.5M	CT11200-M2.5	8757-2.5
KPAM-3	CT11000-M3	8751-3
KPAM-3M	CT11200-M3	8757-3
KPAM-3.5	CT11000-M3.5	8751-3.5
KPAM-3.5M	CT11200-M3.5	8757-3.5
KPAM-4	CT11000-M4	8751-4
KPAM-4M	CT11200-M4	8757-4
KPAM-5	CT11000-M5	8751-5
KPAM-5M	CT11200-M5	8757-5
KPAM-6	CT11000-M6	8751-6
KPAM-6M	CT11200-M6	8757-6
KPAM-7	CT11000-M7	8751-7
KPAM-7M	CT11200-M7	8757-7
KPAM-8	CT11000-M8	8751-8
KPAM-8M	CT11200-M8	8757-8
KPAM-10	CT11000-M10	8751-10
KPAM-10M	CT11200-M10	8757-10
KPAM-12	CT11000-M12	8751-12
KPAM-12M	CT11200-M12	8757-12
Metric Fine		
KPAM-8X1	CT11000-M8X1	8755-8
KPAM-8X1M	CT11200-M8X1	8764-8
KPAM-10X1	CT11000-M10X1	8755-10
KPAM-10X1M	CT11200-M10X1	8764-10
KPAM-10X1.25	CT11000-M10X1.25	8756-10
KPAM-10X1.25M	CT11200-M10X1.25	8759-10
KPAM-12X1.25	CT11000-M12X1.25	8756-12
KPAM-12X1.25M	CT11200-M12X1.25	8759-12
KPAM-12X1.5	CT11000-M10X1.5	8753-12
KPAM-12X1.5M	CT11200-M10X1.5	8774-12

KATO Linear Torque Arm

KATO Linear Torque Arm (2KLRM-1) is designed to install Tangless or tanged KATO CoilThread inserts using any KATO electric installation tool. Add the optional Air Tool Kit (2KLRM-1A), and the KATO Linear Torque Arm will work seemlessly with the KATO pneumatic installation tools.

The KATO Linear Torque Arm offers an unprecedented smoothness of linear and rotational movements as it absorbs the torque reaction inherent with power installation tools. The KATO Linear Torque Arm delivers ultra smooth vertical, horizontal, and rotational motion, provides ergonomic support for the operator, and reduces operator fatigue. The fluid movement of the linear torque arm increases precision and production for a variety of applications.

Features and Benefits

- Keeps the installation tool perpendicular to the work piece.
- Reduces RMI (Repetitive Motion Injury) and CTS (Carpal Tunnel Syndrome) while boosting production.
- Prevents cross threading and side load, prolonging the life of installation mandrels.
- Adjustable arm length.
- Adjustable counter balance provides exceptionally smooth vertical movement.
- Maneuvers smoothly as the arm absorbs torque reactions from electric and pneumatic tools. Torque capacity of 177 in-lbf (20 Nm).

Torque Arm Dimensions:

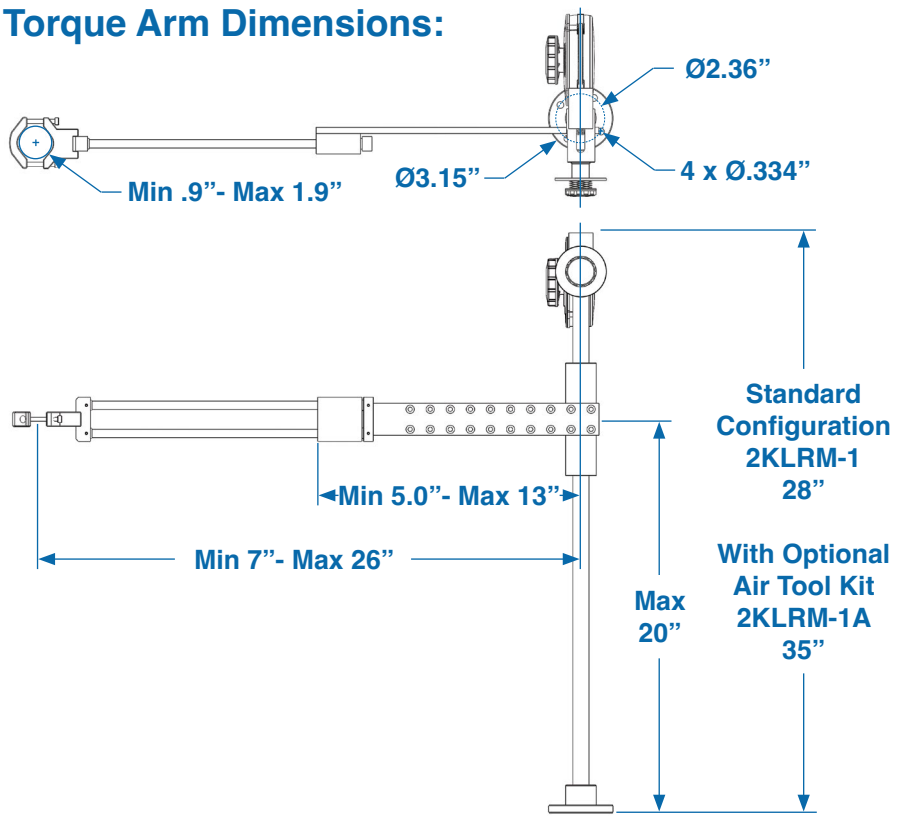

KATO Linear Torque Arm (2KLRM-1)

2KLRM-1 Includes (standard configuration):

- KATO Linear Arm w/ vertical post and table stand.
- Adjustable counter balance.
- Spring loaded strip-feed reel bracket.
- Vertical tool holder designed to fit any KATO electric or pneumatic tool.

Strip-Feed Inserts, Electric Driver, and Transformer not included

Shown with Optional Air Tool Kit (2KLRM-1A)

2KLRM-1A Includes (optional air tool kit):

- Filter-Regulator-Lubricator mounting bracket (*designed to work with the KATO 2KFRL-1*).
- FRL mounting set screws & washers.
- Stainless steel air shutoff valve (1/4” NPT).
- Spiral Hose.
- 1/4” NPT Hose Fitting.
- 1/4” NPT Hose 90° (Elbow) Fitting.
- Teflon Tape.

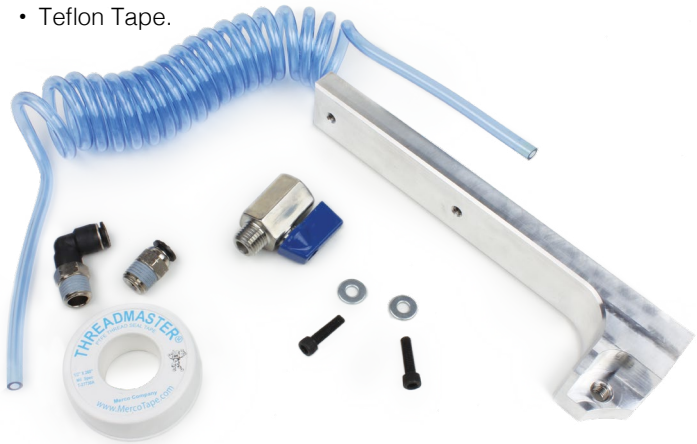

Strip-Feed Inserts, Air Motor, and Filter-Regulator-Lubricator not included

KATO Articulating Torque Arm

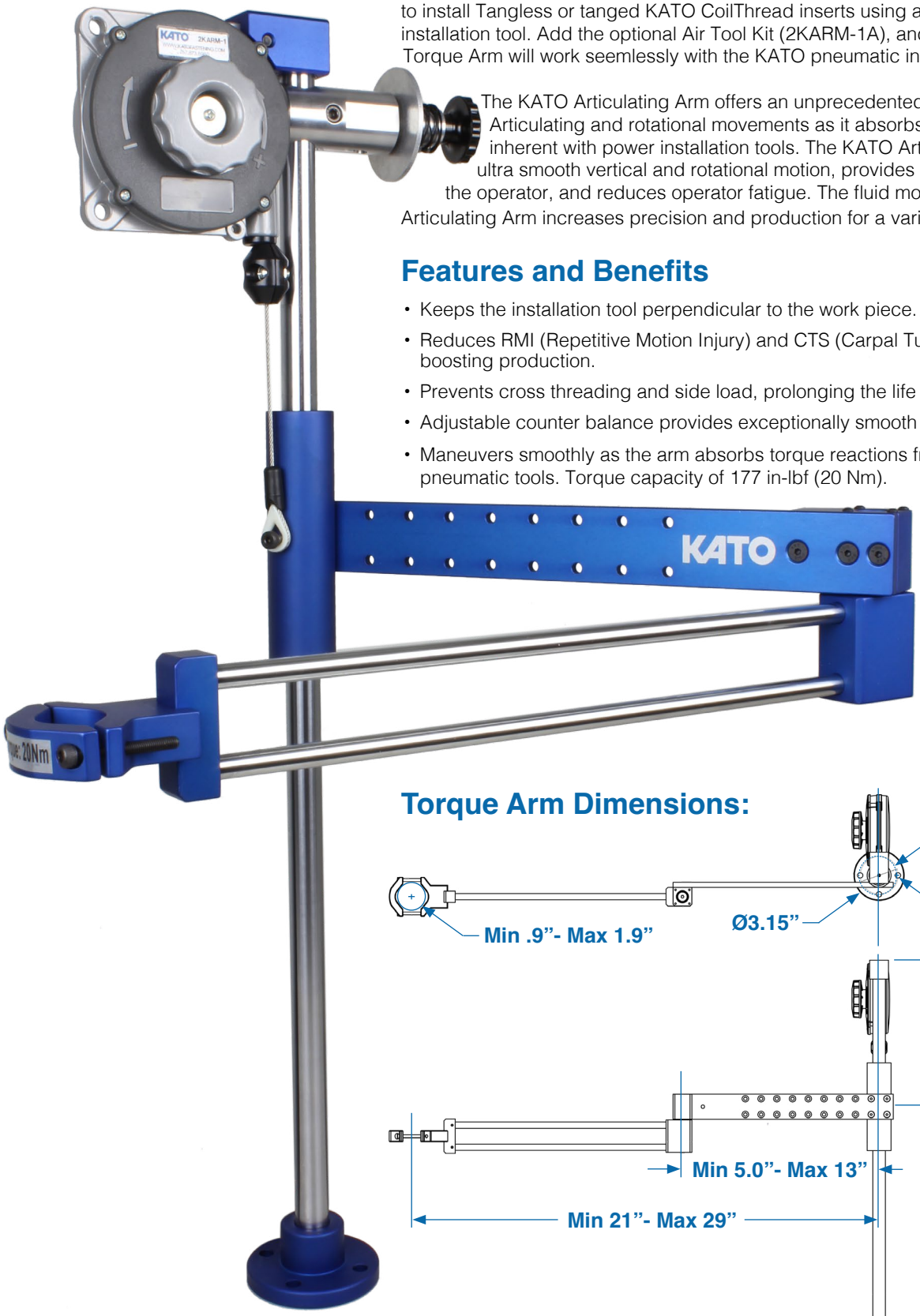

KATO Articulating Torque Arm (2KARM-1) is a torque reaction arm, designed to install Tangless or tanged KATO CoilThread inserts using any KATO electric installation tool. Add the optional Air Tool Kit (2KARM-1A), and the KATO Articulating Torque Arm will work seemlessly with the KATO pneumatic installation tools.

The KATO Articulating Arm offers an unprecedented smoothness of Articulating and rotational movements as it absorbs the torque reaction inherent with power installation tools. The KATO Articulating Arm delivers ultra smooth vertical and rotational motion, provides ergonomic support for the operator, and reduces operator fatigue. The fluid movement of the KATO Articulating Arm increases precision and production for a variety of applications.

Features and Benefits

- Keeps the installation tool perpendicular to the work piece.
- Reduces RMI (Repetitive Motion Injury) and CTS (Carpal Tunnel Syndrome) while boosting production.
- Prevents cross threading and side load, prolonging the life of installation mandrels.
- Adjustable counter balance provides exceptionally smooth vertical movement.
- Maneuvers smoothly as the arm absorbs torque reactions from electric and pneumatic tools. Torque capacity of 177 in-lbf (20 Nm).

Torque Arm Dimensions:

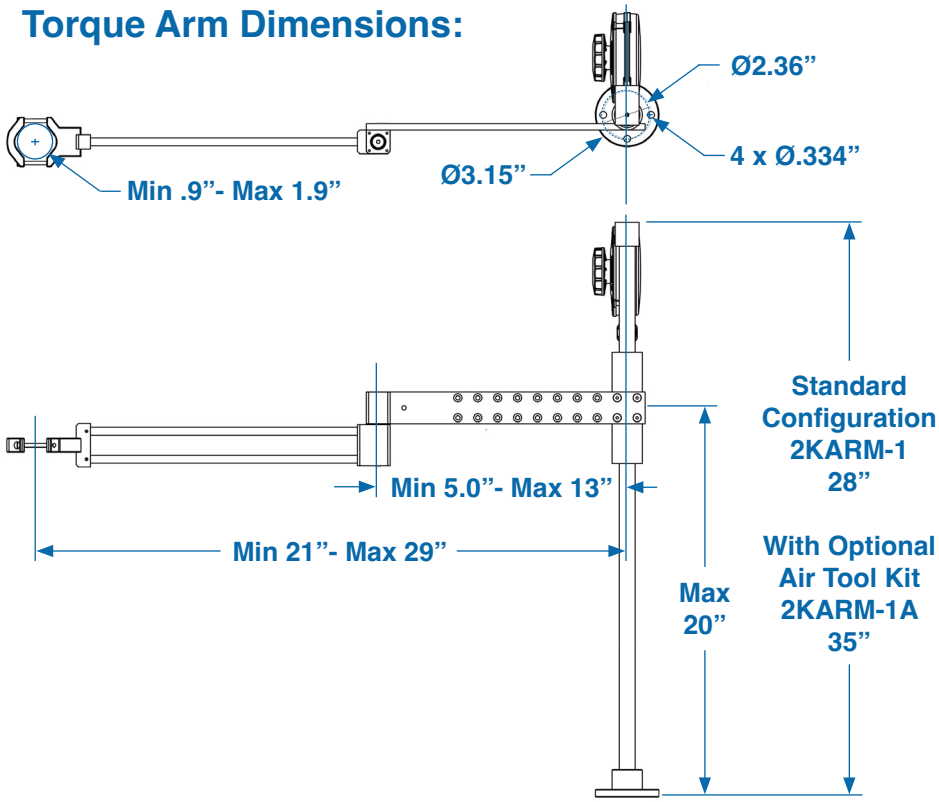

KATO Articulating Torque Arm (2KARM-1)

2KARM-1 Includes (standard configuration):

- KATO Articulating Arm w/ vertical post and table stand.
- Adjustable counter balance.
- Spring loaded strip-feed reel bracket.
- Vertical tool holder designed to fit any KATO electric or pneumatic tool.

Strip-Feed Inserts, Electric Driver, and Transformer not included

Shown with Optional Air Tool Kit (2KARM-1A)

2KARM-1A Includes (optional air tool kit):

- Filter-Regulator-Lubricator mounting bracket (*designed to work with the KATO 2KFRL-1*).
- FRL mounting set screws & washers.
- Stainless steel air shutoff valve (1/4” NPT).
- Spiral Hose.
- 1/4” NPT Hose Fitting.
- 1/4” NPT Hose 90° (Elbow) Fitting.
- Teflon Tape.

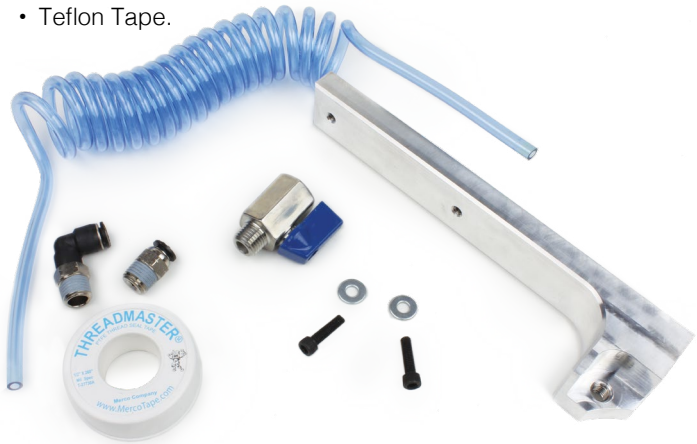

Strip-Feed Inserts, Air Motor, and Filter-Regulator-Lubricator not included

Round Shaft Installation Tools

KATO has transitioned over to the all new KFS-30 Cordless driver, KFS-20 and KFS-25 brushless electric drivers.

KATO maintains the round shaft tools (formerly round electric) for customers still using legacy electric drivers with a keyed chuck system and Tangless round shaft tools for manual installation only.

KATO recommends switching to the Hex Electric installation tools to increase productivity and reduce cost (see pages 59, 64 and 69). For the fastest & most productive semi-automatic cordless installation system. KATO recommends switching to the Prewinder Electric tool (see page 59).

Features and Benefits

- Available for both Tangless and tanged CoilThread inserts.
- Utilizes KATO's One Pawl Fits All system (Tangless).
- Compatibility with legacy round electric drivers.
- Tangless round shaft mandrels can be used for manual installation (Tangless) with the **optional handle (2KREH-UI).**

How to Order

- Round Shaft Installation Tool (see page 84)

Round Shaft Installation - Dimensions

Round Shaft Mandrel Assembly

Thread Size	2KRE - Tangless			KRE - Tanged	
	Length A	Diameter B	Diameter C	Length A	Diameter B
Unified Coarse					
1-64	2.35	0.14	0.18	----	----
2-56	3.10	0.24	0.37	3.00	0.25
4-40	3.10	0.24	0.37	3.02	0.28
6-32	3.00	0.38	0.37	3.00	0.31
8-32	3.10	0.32	0.37	3.00	0.31
10-24	3.00	0.38	0.37	3.01	0.38
12-24	----	----	----	3.01	0.38
1/4-20	3.10	0.37	0.44	3.06	0.45
5/16-18	3.51	0.54	0.54	3.00	0.56
3/8-16	3.68	0.54	0.54	4.00	0.56
Unified Fine					
0-80	1.83	0.12	0.18	---	---
10-32	3.10	0.38	0.44	3.00	0.39
Metric Coarse					
M2X0.4	2.35	0.14	0.18	----	----
M2.5X0.45	2.65	0.24	0.37	3.00	0.25
M3X0.5	2.70	0.24	0.37	2.98	0.24
M3.5X0.6	2.70	0.24	0.37	2.98	0.24
M4X0.7	3.10	0.24	0.37	3.00	0.32
M5X0.8	3.10	0.24	0.37	2.99	0.38
M6X1	3.10	0.44	0.44	3.01	0.44
M8X1.25	3.88	0.51	0.51	3.04	0.56
M10X1.5	4.11	0.61	0.61	---	---
M12X1.75	4.51	0.69	0.69	---	---

Tangless - 2KRE

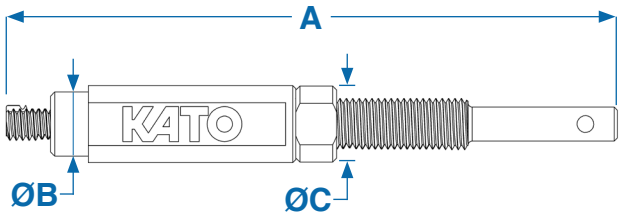

Tanged - KRE

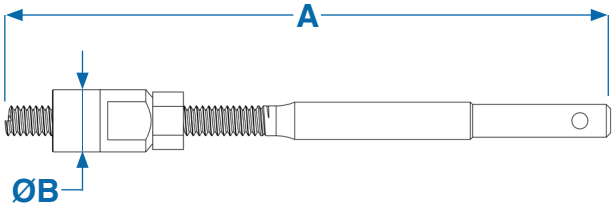

1. All dimensions for reference only.
2. All dimensions are in inches.

2KHEX-1K (Tangless Only)

Already have Round Electric Tools (2KRE series)?

KATO offers a free **Hex Kit (hex sleeve and pin)** to help KATO Tangless customers easily switch to the new KFS-30 cordless driver, as well as the KFS-20 and KFS-25 brushless electric drivers.

Round Shaft Installation - Part Numbers

Thread Size	Tangless Round Shaft Tool[1]	Tangless Replacement Mandrel	Tangless Replacement Pawl	Tang Round Shaft Tool	Optional Handle Tangless Only	Hex Kit
Unified Coarse						
1-64[4]	2KREC-01	2KREC-01M	2KIPC-01	---	Included	---
2-56	2KREC-02	2KREC-02M	2KIPC-02	KREC-02	2KREH-UI	2KHEX-1K
4-40	2KREC-04	2KREC-04M	2KIPC-04	KREC-04		
6-32	2KREC-06	2KREC-06M	2KIPC-06	KREC-06		
8-32	2KREC-2	2KREC-2M	2KIPC-2	KREC-2		
10-24	2KREC-3	2KREC-3M	2KIPC-3	KREC-3		
12-24	---	---	---	KREC-1		
1/4-20	2KREC-4	2KREC-4M	2KIPC-4	KREC-4		
5/16-18	2KREC-5	2KREC-5M	2KIPC-5	KREC-5		
3/8-16	2KREC-6	2KREC-6M	2KIPC-6	KREC-6		
Unified Fine[2]						
0-80[4]	2KREF-00	2KREF-00M	2KIPF-00	---	Included	---
10-32	2KREF-F3	2KREF-F3M	2KIPF-3	KREF-3	2KREH-UI	2KHEX-1K
	2KREF-L3	2KREF-L3M				
Metric Coarse[2]						
M2X0.4[4]	2KREM-F2	2KREM-F2M	2KIPM-2	---	Included	---
	2KREM-L2	2KREM-L2M				
M2.5X0.45	2KREM-F2.5	2KREM-F2.5M	2KIPM-2.5	KREM-2.5	2KREH-UI	2KHEX-1K
	2KREM-L2.5	2KREM-L2.5M				
M3X0.5	2KREM-F3	2KREM-F3M	2KIPM-3	KREM-3		
	2KREM-L3	2KREM-L3M				
M3.5X0.6	---	---	---	KREM-3.5		
M4X0.7	2KREM-F4	2KREM-F4M	2KIPM-4	KREM-4		
	2KREM-L4	2KREM-L4M				
M5X0.8	2KREM-F5	2KREM-F5M	2KIPM-5	KREM-5		
	2KREM-L5	2KREM-L5M				
M6X1	2KREM-F6	2KREM-F6M	2KIPM-6	KREM-6		
	2KREM-L6	2KREM-L6M				
M8x1.25[3]	2KREM-F8	---	See Notes[3]	KREM-8		
	2KREM-L8	---				
M10x1.5[3]	2KREM-F10	---	See Notes[3]	---		
	2KREM-L10	---				
M12X1.75[3]	2KREM-F12	---	See Notes[3]	---		
	2KREM-L12	---				

1. The round shaft tool consists of the installation mandrel (round shaft), installation pawl, spring, pin, wrenches, and adjusting sleeve fully assembled and ready for use. **For manual installation order the optional handle 2KREH-UI handle.**
2. For improved Tangless installation UNF & Metric thread sizes use a different installation mandrel for free-running & locking CoilThread inserts, this is indicated by the -F and -L designation in the part number. **KATO strongly recommends using Prewinder Electric Tool (KPE Series) for Fine and Metric thread sizes.**
3. Not compatible with the KATO One Pawl Fits All system at this time.
4. For smaller thread sizes, manual installation only. These tools include a gage handle.

Tangless Replacement Parts	
Suffix	Description
K	Pawl Kit (add a K to the end of the pawl part number; includes one pawl, two pins, and two springs)
G	Nylon Guard **(example: 2KREC-04G)**
H	Housing **(example: 2KREC-04H)**

Round Shaft Installation - Cross References

For your convenience, the cross reference table below includes the KATO part number, the superseded KATO part number, and the Heli-Coil part number where applicable.

KATO Part Number	Superseded Part Number	Heli-Coil Part Number
Unified Coarse		
2KREC-02	CT16002-02	7571-02
2KREC-02M	CT16410-02BH	---
2KREC-04	CT16002-04	7571-04
2KREC-04M	CT16410-04BH	---
2KREC-06	CT16002-06	7571-06
2KREC-06M	CT16410-06BH	---
2KREC-2	CT16002-2	7571-2
2KREC-2M	CT16410-2BH	---
2KREC-3	CT16002-3	7571-3
2KREC-3M	CT16410-3	---
2KREC-4	CT16002-4	7571-4
2KREC-4M	CT16410-4	---
2KREC-5	---	---
2KREC-5M	---	---
2KREC-6	---	---
2KREC-6M	---	---
Unified Fine		
2KREF-00	---	---
2KREF-F3	CT16003-3	7572-3
2KREF-F3M	CT16411-3	---
2KREF-L3	CT16003-3	7572-3
2KREF-L3M	CT16411-3	---
Metric Coarse		
2KREM-F2	---	---
2KREM-F2.5	CT16002-M2.5F	7587-2.5
2KREM-L2.5	CT16002-M2.5L	7587-2.5S
2KREM-F3	CT16002-M3F	7587-3
2KREM-L3	CT16002-M3L	7587-3S
2KREM-F4	CT16002-M4F	7587-4
2KREM-L4	CT16002-M4L	7587-4S
2KREM-F5	CT16002-M5F	7587-5
2KREM-L5	CT16002-M5L	7587-5S
2KREM-F6	CT16002-M6F	7587-6
2KREM-L6	CT16002-M6L	7587-6S
2KREM-F8	CT16002-M8F	---
2KREM-L8	CT16002-M8L	---
2KREM-F10	---	---
2KREM-L10	---	---
2KREM-F12	---	---
2KREM-L12	---	---

KATO Part Number	Superseded Part Number	Heli-Coil Part Number
Unified Coarse		
KREC-02	CTSB-02C	8051-02
KREC-04	CTSB-04C	8051-04
KREC-06	CTSB-06C	8051-06
KREC-1	CTSB-1C	8051-1
KREC-2	CTSB-2C	8051-2
KREC-3	CTSB-3C	8051-3
KREC-4	CTSB-4C	8051-4
KREC-5	---	---
KREC-6	---	---
Unified Fine		
KREF-3	CTSB-3F	10089-3
KREF-4	CTSB-4F	10089-4
Metric Coarse		
KREM-2.5	CTSB-M2.5	---
KREM-3	CTSB-M3	---
KREM-3.5	CTSB-M3.5	---
KREM-4	CTSB-M4	---
KREM-5	CTSB-M5	---
KREM-6	CTSB-M6	---
KREM-8	CTSB-M8X1.25C	---

Prewinder Hand Tools

The **KATO Prewinder Hand (KPH)** installation tool is designed for low volume users of KATO Tangless and tanged CoilThread inserts. Unlike competitors that utilize plastic body parts, the all-steel construction of the KPH tool makes them sturdy and dependable. The KPH tool is designed with precision and durability in mind for manual installation of CoilThread inserts. Customers that install hundreds or thousands of inserts per month should consider using the KATO Prewinder Electric tool for a significant boost in productivity and reduced labor costs (see pages 59 & 64).

KATO strongly recommends using Prewinder style hand tools for ALL manual installation of CoilThread Tangless and tanged inserts. The prewinder compresses the insert allowing for easier and more consistent installation. For coarse inserts above 1/2”, KATO does not offer the prewinder style hand tool. Style 2 (threaded mandrel) is recommended for these larger sizes.

Features and Benefits

- Available for both Tangless and tanged CoilThread inserts.
- Available for all sizes up to 1-1/2” and M39 (Tangless inserts up to 3/8” and M12).
- All-Steel Construction.
- Utilizes KATO’s One Pawl Fits All system (Tangless).
- Ergonomically friendly design.

How to Order

- A Tangless or tanged Prewinder Hand Tool is all that’s needed (see table on page 89).

Prewinder Hand Tools - Dimensions

Style 1

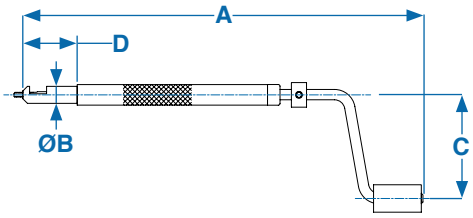

Style 2

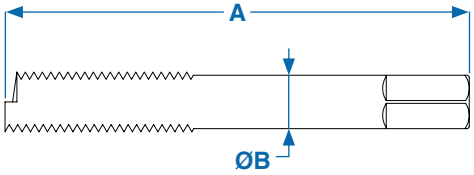

Style 3

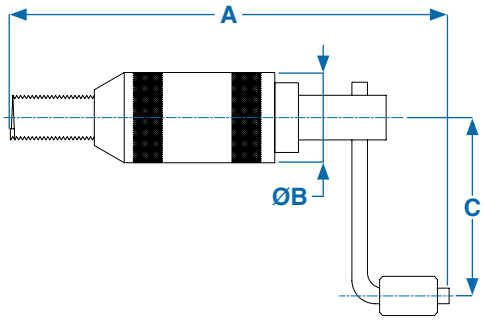

Thread Size	Tool Style	Tangless Tools				Tanged Tools			
		Length A	Diameter B	Length C	Length D	Length A	Diameter B	Length C	Length D
Unified Coarse									
2-56	1	7.47	0.28	2.28	0.59	7.47	0.28	2.28	0.98
3-48		---	---	---	---	7.47	0.31	2.28	1.00
4-40		7.47	0.28	2.28	0.68	7.47	0.28	2.28	0.99
5-40		---	---	---	---	7.47	0.31	2.28	1.00
6-32		7.47	0.28	2.28	0.80	7.47	0.28	2.28	1.00
8-32		7.47	0.32	2.28	0.93	7.47	0.32	2.28	1.00
10-24		7.47	0.37	2.28	0.93	7.47	0.37	2.28	1.00
12-24		---	---	---	---	7.97	0.44	2.53	1.12
1/4-20		7.97	0.50	2.53	1.25	7.97	0.50	2.53	1.25
5/16-18		7.97	0.63	2.94	---	7.97	0.63	3.72	---
3/8-16		7.97	0.69	2.94	---	7.97	0.69	3.72	---
7/16-14		9.70	0.75	3.05	---	8.47	0.75	3.72	---
1/2-13		9.85	0.88	3.05	---	8.84	0.88	3.78	---
9/16-12	2[1]	---	---	---	---	4.25	0.50	---	---
5/8-11		---	---	---	---	5.00	0.56	---	---
3/4-10		---	---	---	---	5.00	0.69	---	---
7/8-9		---	---	---	---	5.00	0.75	---	---
1-8		---	---	---	---	5.00	0.88	---	---
1-1/8-7		---	---	---	---	6.00	1.00	---	---
1-1/4-7		---	---	---	---	6.75	1.25	---	---
1-3/8-6		---	---	---	---	6.75	1.38	---	---
1-1/2-6		---	---	---	---	6.75	1.50	---	---
Unified Fine									
3-56	1	---	---	---	---	7.47	0.31	2.28	0.99
4-48		---	---	---	---	7.47	0.31	2.28	0.99
6-40		---	---	---	---	7.47	0.31	2.28	1.00
8-36		---	---	---	---	7.47	0.32	2.28	1.00
10-32		7.47	0.37	2.28	0.95	7.47	0.37	2.28	0.99
1/4-28		7.97	0.44	2.53	1.24	7.97	0.44	2.53	1.09
5/16-24		7.97	0.63	2.94	---	7.97	0.63	3.72	---
3/8-24		7.97	0.69	2.94	---	7.97	0.69	3.72	---
7/16-20		8.75	0.75	3.72	---	8.75	0.75	3.72	---
1/2-20		9.00	0.88	3.78	---	9.00	0.88	3.78	---
9/16-18	3	---	---	---	---	6.38	1.13	2.88	---
5/8-18		---	---	---	---	6.38	1.13	2.88	---
3/4-16		---	---	---	---	7.00	1.50	2.88	---
7/8-14		---	---	---	---	7.38	1.50	2.88	---
1-12		---	---	---	---	6.88	1.75	2.88	---
1-1/8-12		---	---	---	---	7.31	2.00	2.88	---
1-1/4-12		---	---	---	---	6.81	2.00	2.88	---
1-3/8-12		---	---	---	---	7.31	2.25	3.00	---
1-1/2-12		---	---	---	---	8.00	2.25	3.00	---

1. Style 2 tool (threaded mandrel) does not utilize a prewinder.
2. All dimensions are in inches.
3. All dimensions for reference only.

Prewinder Hand Tools - Dimensions

Style 1

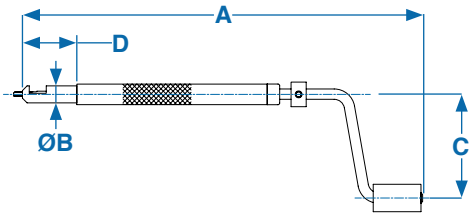

Style 2

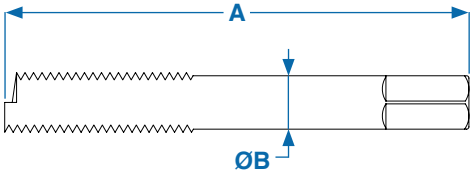

Style 3

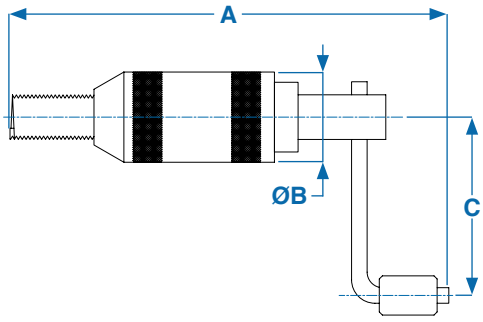

Thread Size	Tool Style	Tangless Tools				Tanged Tools			
		Length A	Diameter B	Length C	Length D	Length A	Diameter B	Length C	Length D
Metric Coarse									
M2X0.4	1	---	---	---	---	7.47	0.28	2.28	0.98
M2.2X0.45		---	---	---	---	7.47	0.31	2.28	0.86
M2.5X0.45		7.47	0.28	2.28	0.62	7.47	0.28	2.28	1.00
M3X0.5		7.47	0.28	2.28	0.69	7.47	0.28	2.28	0.99
M3.5X0.6		---	---	---	---	7.47	0.30	2.28	0.99
M4X0.7		7.47	0.31	2.28	0.96	7.47	0.31	2.28	1.00
M5X0.8		7.47	0.37	2.28	1.00	7.47	0.37	2.28	1.00
M6X1		7.97	0.43	2.28	1.25	7.97	0.43	2.53	1.25
M7X1		---	---	---	---	7.97	0.69	3.72	---
M8X1.25		7.97	0.50	2.53	---	7.97	0.69	3.72	---
M10X1.5		7.97	0.69	2.94	---	8.47	0.75	3.72	---
M12X1.75		7.97	0.83	2.94	---	8.84	0.88	3.78	---
M14X2	2	---	---	---	---	5.38	1.13	4.00	---
M16X2		---	---	---	---	5.38	1.13	4.00	---
M18X2.5		---	---	---	---	4.88	1.24	2.38	---
M20X2.5		---	---	---	---	4.88	1.37	2.75	---
M22X2.5		---	---	---	---	5.88	1.75	4.50	---
M24X3		---	---	---	---	4.88	1.65	2.13	---
M27X3		---	---	---	---	6.88	1.75	2.88	---
Metric Fine									
M8X1	1	---	---	---	---	7.97	0.69	3.72	---
M10X1		---	---	---	---	8.47	0.38	3.72	---
M10X1.25		---	---	---	---	8.47	0.38	3.72	---
M12X1.25		---	---	---	---	8.84	0.88	3.78	---
M12X1.5		---	---	---	---	8.84	0.88	3.78	---
M14X1.5	3	---	---	---	---	5.38	1.13	4.00	---
M16X1.5		---	---	---	---	5.38	1.13	4.00	---
M18X1.5		---	---	---	---	6.00	1.50	4.00	---
M20X1.5		---	---	---	---	6.38	1.50	4.50	---
M22X1.5		---	---	---	---	5.88	1.75	4.50	---
M18X2		---	---	---	---	6.00	1.50	4.00	---
M20X2		---	---	---	---	6.38	1.50	4.50	---
M22X2		---	---	---	---	5.88	1.75	4.50	---
M24X2		---	---	---	---	5.88	1.75	4.50	---
M27X2		---	---	---	---	6.88	1.75	2.88	---
M30X2		---	---	---	---	7.31	2.00	2.88	---
M33X2		---	---	---	---	6.81	2.00	2.88	---
M39X2		---	---	---	---	8.00	2.25	3.00	---
M36X3		---	---	---	---	7.31	2.25	3.00	---
M39X3		---	---	---	---	8.00	2.25	3.00	---

1. Style 2 tool (threaded mandrel) does not utilize a prewinder.
2. All dimensions are in inches.
3. All dimensions for reference only.

Prewinder Hand Tools - Part Numbers

Thread Size	Tangless Prewinder Hand Tool	Tangless Replacement Pawl	Tanged Prewinder Hand Tool	Style
Unified Coarse				
2-56	2KPHC-02	2KIPC-02	KPHC-02	1
3-48	---	---	KPHC-03	
4-40	2KPHC-04	2KIPC-04	KPHC-04	
5-40	---	---	KPHC-05	
6-32	2KPHC-06	2KIPC-06	KPHC-06	
8-32	2KPHC-2	2KIPC-2	KPHC-2	
10-24	2KPHC-3	2KIPC-3	KPHC-3	
12-24	---	---	KPHC-1	
1/4-20	2KPHC-4	2KIPC-4	KPHC-4	
5/16-18	2KPHC-5	2KIPC-5	KPHC-5	
3/8-16	2KPHC-6	2KIPC-6	KPHC-6	
7/16-14	2KPHC-7	2KIPC-7	KPHC-7	
1/2-13	2KPHC-8	2KIPC-8	KPHC-8	
9/16-12	---	---	KPHC-9	2
5/8-11	---	---	KPHC-10	
3/4-10	---	---	KPHC-12	
7/8-9	---	---	KPHC-14	
1-8	---	---	KPHC-16	
1-1/8-7	---	---	KPHC-18	
1-1/4-7	---	---	KPHC-20	
1-3/8-6	---	---	KPHC-22	
1-1/2-6	---	---	KPHC-24	
Unified Fine				
3-56	---	---	KPHF-03	1
4-48	---	---	KPHF-04	
6-40	---	---	KPHF-06	
8-36	---	---	KPHF-2	
10-32	2KPHF-3	2KIPF-3	KPHF-3	
1/4-28	2KPHF-4	2KIPF-4	KPHF-4	
5/16-24	2KPHF-5	2KIPF-5	KPHF-5	
3/8-24	2KPHF-6	2KIPF-6	KPHF-6	
7/16-20[2]	2KPHF-F7	2KIPF-F7	KPHF-7	
	2KPHF-L7	2KIPF-L7		
1/2-20[2]	2KPHF-F8	2KIPF-F8	KPHF-8	
	2KPHF-L8	2KIPF-L8		
9/16-18	---	---	KPHF-9	3
5/8-18	---	---	KPHF-10	
3/4-16	---	---	KPHF-12	
7/8-14	---	---	KPHF-14	
1-12	---	---	KPHF-16	
1-1/8-12	---	---	KPHF-18	
1-1/4-12	---	---	KPHF-20	
1-3/8-12	---	---	KPHF-22	
1-1/2-12	---	---	KPHF-24	

1. Style 2 tool (threaded mandrel) does not utilize a prewinder.
2. For Improved Tangless installation UNF & Metric thread sizes use a different installation mandrel for Free-Running and Locking CoilThread inserts, this is indicated by the -F and -L designation in the part number.

Thread Size	Tangless Prewinder Hand Tool	Tangless Replacement Pawl	Tanged Prewinder Hand Tool	Style
Metric Coarse				
M2X0.4	---	---	KPHM-2	1
M2.2X0.45	---	---	KPHM-2.2	
M2.5X0.45	2KPHM-2.5	2KIPM-2.5	KPHM-2.5	
M3X0.5	2KPHM-3	2KIPM-3	KPHM-3	
M3.5X0.6	---	---	KPHM-3.5	
M4X0.7	2KPHM-4	2KIPM-4	KPHM-4	
M5X0.8	2KPHM-5	2KIPM-5	KPHM-5	
M6X1	2KPHM-6	2KIPM-6	KPHM-6	
M7X1	---	---	KPHM-7	
M8X1.25	2KPHM-8	2KIPM-8	KPHM-8	
M10X1.5	2KPHM-10	2KIPM-10	KPHM-10	
M12X1.75	2KPHM-12	2KIPM-12	KPHM-12	
M14X2	---	---	KPHM-14	3
M16X2	---	---	KPHM-16	
M18X2.5	---	---	KPHM-18	2
M20X2.5	---	---	KPHM-20	3
M22X2.5	---	---	KPHM-22	2
M24X3	---	---	KPHM-24	
M27X3	---	---	KPHM-27	
Metric Fine				
M8X1	---	---	KPHM-8X1	1
M10X1	---	---	KPHM-10X1	
M10X1.25	---	---	KPHM-10X1.25	
M12X1.25	---	---	KPHM-12X1.25	
M12X1.5	---	---	KPHM-12X1.5	
M14X1.5	---	---	KPHM-14X1.5	3
M16X1.5	---	---	KPHM-16X1.5	
M18X1.5	---	---	KPHM-18X1.5	
M18X2	---	---	KPHM-18X2	
M20X1.5	---	---	KPHM-20X1.5	
M20X2	---	---	KPHM-20X2	
M22X1.5	---	---	KPHM-22X1.5	
M22X2	---	---	KPHM-22X2	
M24X2	---	---	KPHM-24X2	
M27X2	---	---	KPHM-27X2	
M30X2	---	---	KPHM-30X2	
M33X2	---	---	KPHM-33X2	
M39X2	---	---	KPHM-39X2	
M36X3	---	---	KPHM-36X3	
M39X3	---	---	KPHM-39X3	

Prewinder Hand Tools - Cross References

For your convenience, the cross reference table below includes the KATO part number, the superseded KATO part number, and the Heli-Coil part number where applicable.

KATO Part Number	Superseded Part Number	Heli-Coil Part Number
Unified Coarse		
2KPHC-02	TCIC-02	17551-02
2KPHC-04	TCIC-04	17551-04
2KPHC-06	TCIC-06	17551-06
2KPHC-2	TCIC-2	17551-2
2KPHC-3	TCIC-3	17551-3
2KPHC-4	TCIC-4	17551-4
2KPHC-5	TCIC-5	---
2KPHC-6	TCIC-6	---
Unified Fine		
2KPHF-3	TCIF-3	17552-3
2KPHF-4	TCIF-4	17552-4
2KPHF-5	TCIF-5	---
2KPHF-6	TCIF-6	---
Metric Coarse		
2KPHM-2.5	TCIM-2.5	17751-2.5
2KPHM-3	TCIM-3	17751-3
2KPHM-4	TCIM-4	17751-4
2KPHM-5	TCIM-5	17751-5
2KPHM-6	TCIM-6	17751-6
2KPHM-8	TCIM-8	---
2KPHM-10	TCIM-10	---
2KPHM-12	TCIM-12	---

KATO Part Number	Superseded Part Number	Heli-Coil Part Number
Unified Coarse		
KPHC-02	CIC-02	551-02
KPHC-03	CIC-03	551-03
KPHC-04	CIC-04	7551-04
KPHC-05	CIC-05	7551-05
KPHC-06	CIC-06	7551-06
KPHC-1	CIC-1	7551-1
KPHC-2	CIC-2	7551-2
KPHC-3	CIC-3	7551-3
KPHC-4	CIC-4	7551-4
KPHC-5	CIC-5	7551-5
KPHC-6	CIC-6	7551-6
KPHC-7	CIC-7	7551-7
KPHC-8	CIC-8	7551-8
KPHC-9	CIC-9	3724-9
KPHC-10	CIC-10	3724-10
KPHC-12	CIC-12	3724-12
KPHC-14	CIC-14	3724-14
KPHC-16	CIC-16	3724-16
KPHC-18	CIC-18	3724-18
KPHC-20	CIC-20	3724-20
KPHC-22	CIC-22	3724-22
KPHC-24	CIC-24	3724-24
Unified Fine		
KPHF-03	CIF-03	7552-03
KPHF-04	CIF-04	7552-04
KPHF-06	CIF-06	7552-06
KPHF-2	CIF-2	7552-2
KPHF-3	CIF-3	7552-3
KPHF-4	CIF-4	7552-4
KPHF-5	CIF-5	7552-5
KPHF-6	CIF-6	7552-6
KPHF-7	CIF-7	7552-7
KPHF-8	CIF-8	7552-8
KPHF-9	CIF-9	535-9
KPHF-10	CIF-10	535-10
KPHF-12	CIF-12	535-12
KPHF-14	CIF-14	535-14
KPHF-16	CIF-16	535-161
KPHF-18	CIF-18	535-18
KPHF-20	CIF-20	535-20
KPHF-22	CIF-22	535-22
KPHF-24	CIF-24	535-24

KATO Part Number	Superseded Part Number	Heli-Coil Part Number
Metric Coarse		
KPHM-2	CIM-2	7751-2
KPHM-2.2	CIM-2.2	7751-2.2
KPHM-2.5	CIM-2.5	7751-2.5
KPHM-3	CIM-3	7751-3
KPHM-3.5	CIM-3.5	7751-3.5
KPHM-4	CIM-4	7751-4
KPHM-5	CIM-5	7751-5
KPHM-6	CIM-6	7751-6
KPHM-7	CIM-7	7751-7
KPHM-8	CIM-8X1.25	7751-8
KPHM-10	CIM-10X1.5	7751-10
KPHM-12	CIM-12X1.75	7751-12
KPHM-14	CIM-14X2	7751-14
KPHM-16	CIM-16X2	7751-16
KPHM-18	CIM-18X2.5	7751-18
KPHM-20	CIM-20X2.5	7751-20
KPHM-22	CIM-22X2.5	7751-22
KPHM-24	CIM-24X3	7751-24
KPHM-27	---	7751-27
Metric Fine		
KPHM-8X1	CIM-8X1	7755-8
KPHM-10X1	CIM-10X1	7755-10
KPHM-10X1.25	CIM-10X1.25	7756-10
KPHM-12X1.25	CIM-12X1.25	7756-12
KPHM-12X1.5	CIM-12X1.5	7753-12
KPHM-14X1.5	CIM-14X1.5	7753-14
KPHM-16X1.5	CIM-16X1.5	7753-16
KPHM-18X1.5	CIM-18X1.5	7753-18
KPHM-18X2	CIM-18X2	7754-18
KPHM-20X1.5	CIM-20X1.5	7753-20
KPHM-20X2	CIM-20X2	7754-20
KPHM-22X1.5	CIM-22X1.5	7753-22
KPHM-22X2	CIM-22X2	7754-22
KPHM-24X2	CIM-24X2	7754-24
KPHM-27X2	---	7754-27
KPHM-30X2	---	7754-30
KPHM-33X2	---	7754-33
KPHM-39X2	---	7754-39
KPHM-36X3	---	7752-36
KPHM-39X3	---	7752-39

KATO Removal Tools

KATO Removal Tools (KRT) are insert specific, one style for Tangless CoilThread inserts and one for tanged CoilThread inserts.

Tangless: The Tangless KATO Removal Tool (2KRT) is unique in the helical coil screw thread insert industry. The KATO Tangless removal tool allows quick, non-destructive removal of Tangless inserts, preventing damage to the parent material and expensive castings.

The KATO Tangless removal tool simply threads into the installed insert, grabs the removal notch and threads the insert out without damaging the internal STI threads or surface of the casting (unlike competitor tools that must be manually lined up with the drive notch of the installed insert). Another unique feature to the KATO Tangless removal tool is it's ability to back out or adjust an insert that has been installed too deep; giving operators greater control over installation depth.

As an added benefit, the mandrel assembly portion of the KATO Tangless removal tool can be withdrawn from the blue handle and inserted into the KATO SB-400C (CT5405) or SB-650C (CT5406) Electric Drivers for high-speed removal, or adjustment, for a large number of inserts. This is impossible with competitor removal tools or with conventional tanged style inserts.

Tanged: The KATO Tanged Removal/Extraction Tool (KRT) is designed with a wedge-shaped tip and an integrated handle. The sharp tip is used to dig into the installed tanged insert (a hammer may be required). The handle is then used to turn the tool counter-clockwise while applying pressure until the insert is extracted from the parent material. Extraction of a tanged insert is only possible if the insert isn't installed too deep, and the KRT can reach it.

The extraction process typically results in damage to the surface of the parent material and possibly the STI Threads as well. KATO suggests caution when using the KRT to minimize damage to parent material. To avoid damage to your casting and minimize rework KATO recommends using Tangless CoilThread inserts.

Consider switching to KATO Tangless CoilThread inserts and never use a destructive tanged extraction tool again!

Features and Benefits - For Tangless 2KRT only:

- Provides quick, non-destructive removal.
- Easily adjusts the installation depth of inserts that are too deep.
- Can be used in KATO electric drivers for fast, convenient removal or depth adjustment.

Tangled Removal/Extraction Tool (KRT Series)

Tangless Removal Tool (2KRT Series)

Handle & Wrenches Included

Removal Tools - Dimensions

2KRT

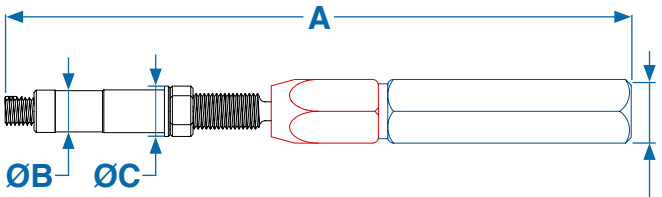

Hex Handle
See table below:

Thread Size	Length A	Diameter B	Diameter C	Hex Handle
Unified Coarse				
1-64	4.00	0.14	0.17	3/8
2-56	5.16	0.24	0.37	9/16
4-40	5.33	0.24	0.37	9/16
6-32	5.36	0.37	0.37	9/16
8-32	5.56	0.37	0.37	9/16
10-24	5.62	0.35	0.43	9/16
1/4-20	5.50	0.37	0.44	9/16
5/16-18	5.74	0.70	0.70	9/16
3/8-16	5.76	0.70	0.70	9/16
7/16-14	6.90	0.54	0.54	11/16
1/2-13	7.00	0.54	0.54	11/16
Unified Fine				
0-80	3.52	0.24	0.27	1/4
10-32	5.47	0.37	0.37	9/16
1/4-28	5.67	0.37	0.44	9/16
5/16-24	5.80	0.55	0.55	9/16
3/8-24	5.72	0.55	0.55	9/16
7/16-20	6.90	0.70	0.70	11/16
1/2-20	7.00	0.70	0.70	11/16
Metric Coarse				
M2X0.4	4.00	0.14	0.17	3/8
M2.5X0.45	4.87	0.25	0.37	9/16
M3X0.5	5.00	0.25	0.37	9/16
M4X0.7	5.40	0.37	0.37	9/16
M5X0.8	5.20	0.37	0.37	9/16
M6X1	5.30	0.35	0.43	9/16
M8X1.25	6.35	0.51	0.51	9/16
M10X1.5	6.58	0.59	0.59	9/16
M12X1.75	7.00	0.68	0.68	9/16

KRT

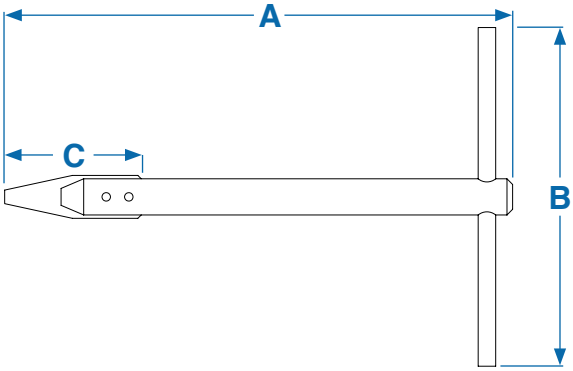

Thread Size	Length A	Diameter B	Length C
Unified Thread Sizes			
2-56	4.45	3.00	0.63
(3-48) - (8-32)	4.45	3.00	0.63
(10-24) - (3/8-16)	4.25	3.00	0.56
(7/16-14) - (1-8)	5.06	4.00	1.63
(1-1/8-7) - (1-1/2-6)	6.13	4.00	1.31
Metric Thread Sizes			
M2.2 - M2.5	4.45	3.00	0.63
M3 - M4	4.45	3.00	0.63
M5 - M10	4.25	3.00	0.56
M12 - M24	5.06	4.00	1.63
M26- M39	6.13	4.00	1.31

1. All dimensions are in inches.
2. All dimensions are for reference only.

Removal Tools - Part Numbers

Thread Size	Tangless Removal Tool	Tangless Replacement Pawl	Tanged Removal Tool
Unified Coarse			
1-64	2KRTC-01	2KRPC-01	---
2-56	2KRTC-02	2KRPC-02	KRTV-02
3-48	---	---	KRTV-06
4-40	2KRTC-04	2KRPC-04	
5-40	---	---	
6-32	2KRTC-06	2KRPC-06	
8-32	2KRTC-2	2KRPC-2	
10-24	2KRTC-3	2KRPC-3	KRTV-6
12-24	---	---	
1/4-20	2KRTC-4	2KRPC-4	
5/16-18	2KRTC-5	2KRPC-5	
3/8-16	2KRTC-6	2KRPC-6	
7/16-14	2KRTC-7	2KRPC-7	KRTV-16
1/2-13	2KRTC-8	2KRPC-8	
9/16-12	---	---	
5/8-11	---	---	
3/4-10	---	---	
7/8-9	---	---	
1-8	---	---	
1-1/8-7	---	---	KRTV-24
1-1/4-7	---	---	
1-3/8-6	---	---	
1-1/2-6	---	---	
Unified Fine			
0-80	2KRTF-00	2KRPF-00	---
3-56	---	---	KRTV-06
4-48	---	---	
6-40	---	---	
8-36	---	---	
10-32	2KRTF-3	2KRPF-3	KRTV-6
1/4-28	2KRTF-4	2KRPF-4	
5/16-24	2KRTF-5	2KRPF-5	
3/8-24	2KRTF-6	2KRPF-6	
7/16-20	2KRTF-7	2KRPF-7	KRTV-16
1/2-20	2KRTF-8	2KRPF-8	
9/16-18	---	---	
5/8-18	---	---	
3/4-16	---	---	
7/8-14	---	---	
1-12	---	---	
1-1/8-12	---	---	KRTV-24
1-1/4-12	---	---	
1-3/8-12	---	---	
1-1/2-12	---	---	

Thread Size	Tangless Removal Tool	Tangless Replacement Pawl	Tanged Removal Tool
Metric Coarse			
M2X0.4	2KRTM-2	2KRPM-2	KRTV-02
M2.2X0.45	---	---	KRTV-06
M2.5X0.45	2KRTM-2.5	2KRPM-2.5	
M3X0.5	2KRTM-3	2KRPM-3	
M3.5X0.6	---	---	
M4X0.7	2KRTM-4	2KRPM-4	
M5X0.8	2KRTM-5	2KRPM-5	KRTV-6
M6X1	2KRTM-6	2KRPM-6	
M7X1	---	---	
M8X1.25	2KRTM-8	2KRPM-8	
M10X1.5	2KRTM-10	2KRPM-10	
M12X1.75	2KRTM-12	2KRPM-12	KRTV-16
M14X2	---	---	
M16X2	---	---	
M18X2.5	---	---	
M20X2.5	---	---	
M22X2.5	---	---	
M24X3	---	---	
M27X3	---	---	
Metric Fine			
M8X1	---	---	KRTV-6
M10X1	---	---	
M10X1.25	---	---	
M12X1.25	---	---	KRTV-16
M12X1.5	---	---	
M14X1.5	---	---	
M16X1.5	---	---	
M18X1.5	---	---	
M18X2	---	---	
M20X1.5	---	---	
M20X2	---	---	
M22X1.5	---	---	
M22X2	---	---	
M24X2	---	---	
M27X2	---	---	
M30X2	---	---	KRTV-24
M33X2	---	---	
M39X2	---	---	
M36X3	---	---	
M39X3	---	---	

Tangless Replacement Parts	
Suffix	**Description**
K	Pawl Kit (add a K to the end of the pawl part number; includes one pawl, two pins, and two springs)
G	Nylon Guard **(example: 2KRTC-04G)**
M	Replacement Mandrel **(example: 2KRTC-04M)**
H	Housing **(example: 2KRTC-04H)**

Removal Tools - Cross References

For your convenience, the cross reference table below includes the KATO part number, the superseded KATO part number, and the Heli-Coil part number where applicable.

KATO Part Number	Superseded Part Number	Heli-Coil Part Number
Unified Coarse		
2KRTC-02	CT16002R-02	7570-02
2KRTC-02M	CT16410-02	---
2KRTC-04	CT16002R-04	7570-04
2KRTC-04M	CT16410-04	---
2KRTC-06	CT16002R-06	7570-06
2KRTC-06M	CT16410-06	---
2KRTC-2	CT16002R-2	7570-2
2KRTC-2M	CT16410-2	---
2KRTC-3	CT16002R-3	7570-3
2KRTC-3M	CT16410R-3	---
2KRTC-4	CT16002R-4	7570-4
2KRTC-4M	CT16410R-4	---
2KRTC-5	---	---
2KRTC-5M	---	---
2KRTC-6	---	---
2KRTC-6M	---	---
Unified Fine		
2KRTF-00	---	---
2KRTF-3	CT16003R-3	7560-3
2KRTF-3M	CT16411R-3	---
2KRTF-4	CT16003R-4	7560-4
2KRTF-4M	CT16411R-4	---
2KRTF-5	---	---
2KRTF-5M	---	---
2KRTF-6	---	---
2KRTF-6M	---	---
Metric Coarse		
2KRTM-2	---	---
2KRTM-2.5	CT16002R-M2.5	---
2KRTM-3	CT16002R-M3	---
2KRTM-4	CT16002R-M4	---
2KRTM-5	CT16002R-M5	---
2KRTM-6	CT16002R-M6	---
2KRTM-8	CT16002R-M8	---
2KRTM-10	CT16002R-M10	---
2KRTM-12	CT16002R-M12	---

KATO Part Number	Superseded Part Number	Heli-Coil Part Number
KRTV-02	CET-02	1227-02
KRTV-06	CET-06	1227-06
KRTV-6	CET-6	1227-6
KRTV-16	CET-16	1227-16
KRTV-24	CET-24	1227-24

Tang Break-Off Tool

The **KATO Tang Break-Off Tool (KTBT)**, as the name implies is a spring-loaded punch designed to cleanly break the tang off of conventional CoilThread inserts once they are installed. KATO recommends the tang be removed from the insert after installation.

The standard KTBT tool is designed to break off tangs for inserts up to 2 diameter in length. A longer punch is needed for 2.5 & 3 diameter nominal length inserts (see table on page 97).

To eliminate the tang break-off process, and to ensure a FOD-Free assembly consider switching to KATO Tangless CoilThread inserts. There are no tangs to break-off, retrieve, or lose!

Features and Benefits

- Available for tanged insert sizes up to 1/2” and M12.
- Steel construction for durability and prolonged tool life.
- Replacement punch available for all sizes.
- Lower cost than similar tools from competitors.

Tang Break-Off Tool - Dimensions

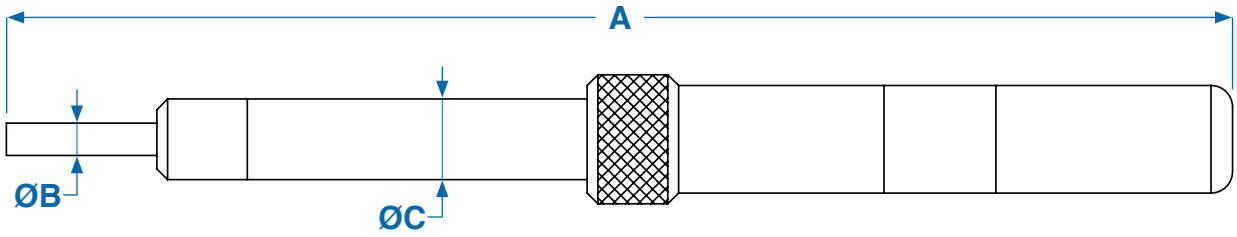

Thread Size	Length A	Diameter B	Diameter C
Unified Coarse			
2-56	5.44	0.06	0.38
3-48	5.44	0.06	0.38
4-40	5.50	0.08	0.38
5-40	5.50	0.08	0.38
6-32	5.56	0.09	0.38
8-32	5.63	0.11	0.38
10-24	5.75	0.13	0.38
12-24	5.75	0.13	0.38
1/4-20	5.81	0.15	0.38
5/16-18	5.81	0.12	0.47
3/8-16	5.94	0.19	0.47
7/16-14	7.22	0.23	0.56
1/2-13	7.34	0.29	0.56
Unified Fine			
3-56	5.44	0.06	0.38
4-48	5.50	0.08	0.38
6-40	5.56	0.09	0.38
8-36	5.63	0.11	0.38
10-32	5.75	0.13	0.38
1/4-28	5.81	0.15	0.38
5/16-24	5.81	0.12	0.47
3/8-24	5.81	0.19	0.47
7/16-20	7.22	0.23	0.56
1/2-20	7.34	0.29	0.56

Thread Size	Length A	Diameter B	Diameter C
Metric Coarse			
M2X0.4	5.44	0.06	0.38
M2.2X0.45	5.44	0.06	0.38
M2.5X0.45	5.44	0.06	0.38
M3X0.5	5.50	0.08	0.38
M3.5X0.6	5.56	0.09	0.38
M4X0.7	5.63	0.11	0.38
M5X0.8	5.75	0.13	0.38
M6X1	5.81	0.15	0.38
M7X1	5.81	0.15	0.38
M8X1.25	5.81	0.12	0.47
M10X1.5	5.94	0.19	0.47
M12X1.75	7.34	0.29	0.56
Metric Fine			
M8X1	5.81	0.12	0.47
M10X1	5.94	0.19	0.47
M10X1.25	5.94	0.19	0.47
M12X1.25	7.34	0.29	0.56
M12X1.5	7.34	0.29	0.56

1. All dimensions are in inches.
2. All dimensions are for reference only.

Tang Break-Off Tool - Part Numbers

Thread Size	Tang Break-Off Tool (1, 1.5 & 2D)	Replacement Punch (1, 1.5 & 2D)	Tanged Break-Off Tool (2.5 & 3D)	Replacement Punch (2.5 & 3D)
Unified Coarse				
2-56	KTBT-02	KTBT-02RP	KTBT-02-30	KTBT-02RP-30
3-48	KTBT-03	KTBT-03RP	KTBT-03-30	KTBT-03RP-30
4-40	KTBT-04	KTBT-04RP	KTBT-04-30	KTBT-04RP-30
5-40	KTBT-04	KTBT-04RP	KTBT-04-30	KTBT-04RP-30
6-32	KTBT-06	KTBT-06RP	KTBT-06-30	KTBT-06RP-30
8-32	KTBT-2	KTBT-2RP	KTBT-2-30	KTBT-2RP-30
10-24	KTBT-3	KTBT-3RP	KTBT-3-30	KTBT-3RP-30
12-24	KTBT-3	KTBT-3RP	KTBT-3-30	KTBT-3RP-30
1/4-20	KTBT-4	KTBT-4RP	KTBT-4-30	KTBT-4RP-30
5/16-18	KTBT-5	KTBT-5RP	KTBT-5-30	KTBT-5RP-30
3/8-16	KTBT-6	KTBT-6RP	KTBT-6-30	KTBT-6RP-30
7/16-14	KTBT-7	KTBT-7RP	KTBT-7-30	KTBT-7RP-30
1/2-13	KTBT-8	KTBT-8RP	KTBT-8-30	KTBT-8RP-30
Unified Fine				
3-56	KTBT-03	KTBT-03RP	KTBT-03-30	KTBT-03RP-30
4-48	KTBT-04	KTBT-04RP	KTBT-04-30	KTBT-04RP-30
6-40	KTBT-06	KTBT-06RP	KTBT-06-30	KTBT-06RP-30
8-36	KTBT-2	KTBT-2RP	KTBT-2-30	KTBT-2RP-30
10-32	KTBT-3	KTBT-3RP	KTBT-3-30	KTBT-3RP-30
1/4-28	KTBT-4	KTBT-4RP	KTBT-4-30	KTBT-4RP-30
5/16-24	KTBT-5	KTBT-5RP	KTBT-5-30	KTBT-5RP-30
3/8-24	KTBT-6	KTBT-6RP	KTBT-6-30	KTBT-6RP-30
7/16-20	KTBT-7	KTBT-7RP	KTBT-7-30	KTBT-7RP-30
1/2-20	KTBT-8	KTBT-8RP	KTBT-8-30	KTBT-8RP-30

Thread Size	Tang Break-Off Tool (1, 1.5 & 2D)	Replacement Punch (1, 1.5 & 2D)	Tanged Break-Off Tool (2.5 & 3D)	Replacement Punch (2.5 & 3D)
Metric Coarse				
M2X0.4	KTBT-02	KTBT-02RP	KTBT-02-30	KTBT-02RP-30
M2.2X0.45	KTBT-02	KTBT-02RP	KTBT-02-30	KTBT-02RP-30
M2.5X0.45	KTBT-03	KTBT-03RP	KTBT-03-30	KTBT-03RP-30
M3X0.5	KTBT-04	KTBT-04RP	KTBT-04-30	KTBT-04RP-30
M3.5X0.6	KTBT-06	KTBT-06RP	KTBT-06-30	KTBT-06RP-30
M4X0.7	KTBT-2	KTBT-2RP	KTBT-2-30	KTBT-2RP-30
M5X0.8	KTBT-3	KTBT-3RP	KTBT-3-30	KTBT-3RP-30
M6X1	KTBT-4	KTBT-4RP	KTBT-4-30	KTBT-4RP-30
M7X1	KTBT-4	KTBT-4RP	KTBT-4-30	KTBT-4RP-30
M8X1.25	KTBT-5	KTBT-5RP	KTBT-5-30	KTBT-5RP-30
M10X1.5	KTBT-6	KTBT-6RP	KTBT-6-30	KTBT-6RP-30
M12X1.75	KTBT-8	KTBT-8RP	KTBT-8-30	KTBT-8RP-30
Metric Fine				
M8X1	KTBT-5	KTBT-5RP	KTBT-5-30	KTBT-5RP-30
M10X1	KTBT-6	KTBT-6RP	KTBT-6-30	KTBT-6RP-30
M10X1.25	KTBT-6	KTBT-6RP	KTBT-6-30	KTBT-6RP-30
M12X1.25	KTBT-8	KTBT-8RP	KTBT-8-30	KTBT-8RP-30
M12X1.5	KTBT-8	KTBT-8RP	KTBT-8-30	KTBT-8RP-30

1. **Please Note:** For sizes larger than 1/2” and M12 use long-nosed pliers; bend tang up and down to snap off at notch.

Tang Break-Off Tool - Cross References

For your convenience, the cross reference table below includes the KATO part number, the superseded KATO part number, and the Heli-Coil part number where applicable.

KATO Part Number	Superseded Part Number	Heli-Coil Part Number	KATO Replacement Punch	Superseded Replacement Punch	Heli-Coil Replacement Punch
Unified Coarse					
KTBT-02	CAB-02	3695-02	KTBT-02RP	CAB-02RP	3697-02
KTBT-04	CAB-04	3695-04	KTBT-04RP	CAB-04RP	3697-04
KTBT-06	CAB-06	3695-06	KTBT-06RP	CAB-06RP	3697-06
KTBT-2	CAB-2	3695-2	KTBT-2RP	CAB-2RP	3697-2
KTBT-3	CAB-3	3695-3	KTBT-3RP	CAB-3RP	3697-3
KTBT-4	CAB-4	3695-4	KTBT-4RP	CAB-4RP	3697-4
KTBT-5	CAB-5	3695-5	KTBT-5RP	CAB-5RP	3643-5
KTBT-6	CAB-6	3695-6	KTBT-6RP	CAB-6RP	3643-6
KTBT-7	CAB-7	3695-7	KTBT-7RP	CAB-7RP	3643-7
KTBT-8	CAB-8	3695-8	KTBT-8RP	CAB-8RP	3643-8
Unified Fine					
KTBT-02	CAB-02	3695-02	KTBT-02RP	CAB-02RP	3697-02
KTBT-04	CAB-04	3695-04	KTBT-04RP	CAB-04RP	3697-04
KTBT-06	CAB-06	3695-06	KTBT-06RP	CAB-06RP	3697-06
KTBT-2	CAB-2	3695-2	KTBT-2RP	CAB-2RP	3697-2
KTBT-3	CAB-3	3695-3	KTBT-3RP	CAB-3RP	3697-3
KTBT-4	CAB-4	3695-4	KTBT-4RP	CAB-4RP	3697-4
KTBT-5	CAB-5	3692-5	KTBT-5RP	CAB-5RP	3645-5
KTBT-6	CAB-6	3692-6	KTBT-6RP	CAB-6RP	3645-6
KTBT-7	CAB-7	3692-7	KTBT-7RP	CAB-7RP	3645-7
KTBT-8	CAB-8	3692-8	KTBT-8RP	CAB-8RP	3645-8
Metric Coarse					
KTBT-02	CAB-02	4238-2.2	KTBT-02RP	CAB-02RP	3697-02
KTBT-04	CAB-04	4238-3	KTBT-04RP	CAB-04RP	3697-04
KTBT-06	CAB-06	4238-3	KTBT-06RP	CAB-06RP	3697-04
KTBT-2	CAB-2	4238-4	KTBT-2RP	CAB-2RP	3697-2
KTBT-3	CAB-3	4238-5	KTBT-3RP	CAB-3RP	3697-3
KTBT-4	CAB-4	4238-6	KTBT-4RP	CAB-4RP	3697-4
KTBT-4	CAB-4	4238-7	KTBT-4RP	CAB-4RP	4436-7
KTBT-5	CAB-6	4238-8	KTBT-5RP	CAB-5RP	3643-5
KTBT-6	CAB-7	4238-10	KTBT-6RP	CAB-6RP	4436-10
KTBT-8	CAB-8	4238-12	KTBT-8RP	CAB-8RP	4436-12
Metric Fine					
KTBT-5	CAB-5	4238-8	KTBT-5RP	CAB-5RP	3643-5
KTBT-6	CAB-6	4238-10	KTBT-6RP	CAB-6RP	4436-10
KTBT-6	CAB-6	4238-10	KTBT-6RP	CAB-6RP	4436-10
KTBT-8	CAB-6	4238-12	KTBT-8RP	CAB-8RP	4436-12
KTBT-8	CAB-8	4238-12	KTBT-8RP	CAB-8RP	4436-12

KATO Pro-Kits®

KATO Pro-Kits® are the world's first Tangless MRO / thread repair kit designed for professionals. KATO Pro-Kits are ideal for mechanics, maintenance departments, original equipment manufacturers, machine shops, restoration shops and prototype fabricators.

The KATO Pro-Kits are truly professional grade thread repair kits. Designed by KATO engineers, Pro-Kits consist of Aerospace quality free-running or screw-locking KATO Tangless inserts (made from 304 stainless steel), nickel plated production grade installation tool, HSS STI tap and drill bit. KATO Pro-Kits are available in the most popular unified and metric thread sizes and are ideal for aerospace, aviation, automotive, commercial applications and much more!

Damaged threads can be brought back to the original thread size and made better than new. Thread wear, corrosion and galling will be virtually eliminated. Assembly will be even stronger than the original. **KATO Pro-Kits contain everything needed to get the job done from start to finish.**

KATO Pro-Kits save time and money!

- Tangless inserts are bi-directional, no need to orient the insert for installation.
- FOD-Free Design, no foreign object or debris.
- Non-destructive removal and depth adjustment.
- No tangs to break-off, retrieve or lose.

Proudly made in the USA!

Each KATO Pro-Kits consists of:

30 aerospace quality free-running or screw-locking inserts, 10 each in three nominal lengths (1D, 1.5D & 2D).

KATO Pro-Kits® - Part Numbers

Insert Pack Available

2KPR C - 4 L

Product Code:
- **2KPR** - Tangless KATO Pro-Kits

Thread Designation:
- **C** - Coarse
- **F** - Fine
- **M** - Metric

Size Designation:

Kit Style:
- **Blank** - Free Running
- **L** - Screw-Locking

Thread Size	KATO Pro-Kits		Inserts Part No.			
	Free-Running	Screw-Locking	1D[1]	1.5D[1]	2D[1]	Inserts Per Pack
Unified Coarse						
2-56	2KPRC-02	2KPRC-02L	2KPRC-02-10	2KPRC-02-15	2KPRC-02-20	10
4-40	2KPRC-04	2KPRC-04L	2KPRC-04-10	2KPRC-04-15	2KPRC-04-20	10
6-32	2KPRC-06	2KPRC-06L	2KPRC-06-10	2KPRC-06-15	2KPRC-06-20	10
8-32	2KPRC-2	2KPRC-2L	2KPRC-2-10	2KPRC-2-15	2KPRC-2-20	10
10-24	2KPRC-3	2KPRC-3L	2KPRC-3-10	2KPRC-3-15	2KPRC-3-20	10
1/4-20	2KPRC-4	2KPRC-4L	2KPRC-4-10	2KPRC-4-15	2KPRC-4-20	10
5/16-18	2KPRC-5	2KPRC-5L	2KPRC-5-10	2KPRC-5-15	2KPRC-5-20	10
3/8-16	2KPRC-6	2KPRC-6L	2KPRC-6-10	2KPRC-6-15	2KPRC-6-20	10
7/16-14	2KPRC-7	2KPRC-7L	2KPRC-7-10	2KPRC-7-15	2KPRC-7-20	10
1/2-13	2KPRC-8	2KPRC-8L	2KPRC-8-10	2KPRC-8-15	2KPRC-8-20	10
Unified Fine						
10-32	2KPRF-3	2KPRF-3L	2KPRF-3-10	2KPRF-3-15	2KPRF-3-20	10
1/4-28	2KPRF-4	2KPRF-4L	2KPRF-4-10	2KPRF-4-15	2KPRF-4-20	10
5/16-24	2KPRF-5	2KPRF-5L	2KPRF-5-10	2KPRF-5-15	2KPRF-5-20	10
3/8-24	2KPRF-6	2KPRF-6L	2KPRF-6-10	2KPRF-6-15	2KPRF-6-20	10
7/16-20	2KPRF-7	2KPRF-7L	2KPRF-7-10	2KPRF-7-15	2KPRF-7-20	10
1/2-20	2KPRF-8	2KPRF-8L	2KPRF-8-10	2KPRF-8-15	2KPRF-8-20	10
Metric Coarse						
M2.5X.45	2KPRM-2.5	2KPRM-2.5L	2KPRM-2.5-10	2KPRM-2.5-15	2KPRM-2.5-20	10
M3X.5	2KPRM-3	2KPRM-3L	2KPRM-3-10	2KPRM-3-15	2KPRM-3-20	10
M4X.7	2KPRM-4	2KPRM-4L	2KPRM-4-10	2KPRM-4-15	2KPRM-4-20	10
M5X.8	2KPRM-5	2KPRM-5L	2KPRM-5-10	2KPRM-5-15	2KPRM-5-20	10
M6X1	2KPRM-6	2KPRM-6L	2KPRM-6-10	2KPRM-6-15	2KPRM-6-20	10
M8X1.25	2KPRM-8	2KPRM-8L	2KPRM-8-10	2KPRM-8-15	2KPRM-8-20	10
M10X1.5	2KPRM-10	2KPRML10L	2KPRM-10-10	2KPRM-10-15	2KPRM-10-20	10
M12X1.75	2KPRM-12	2KPRM-12L	2KPRM-12-10	2KPRM-12-15	2KPRM-12-20	10
Metric Fine						
M10X1.25	2KPRM-10X1.25	2KPRML10X1.25L	2KPRM-10X1.25-10	2KPRM-10X1.25-15	2KPRM-10X1.25-20	10
M12X1.25	2KPRM-12X1.25	2KPRM-12X1.25L	2KPRM-12X1.25-10	2KPRM-12X1.25-15	2KPRM-12X1.25-20	10
M14X1.5	2KPRM-14X1.5	2KPRM-14X1.5L	2KPRM-14X1.5-10	2KPRM-14X1.5-15	2KPRM-14X1.5-20	10
M16X1.5	2KPRM-16X1.5	2KPRM-16X1.5L	2KPRM-16X1.5-10	2KPRM-16X1.5-15	2KPRM-16X1.5-20	10

1. Screw-locking insert packs available, replace the second dash with an "L":
   Example: **2KPRC-3L10** for 1D, **2KPRC-3L15** for 1.5D, **and 2KPRC-3L20** for 2D

Perma-Coil Kits (Screw Thread Inserts for Maintenance, Repair and Overhaul) are universally accepted method of repairing stripped threads in all types of materials. By using Perma-Coil Kits, damaged threads can be brought back to the original thread size, and better than new. Thread wear, corrosion and galling will be virtually eliminated, and the assembly will be stronger than the original with CoilThread inserts. Unlike threaded solid bushing type fasteners, CoilThread inserts provide space and weight savings. In addition, CoilThread inserts eliminate the need for oversized drilling and tapping, thread welding, or plugging of damaged holes.

At KATO, there is only one standard of quality for original equipment or repair. KATO CoilThread inserts meet or exceed all applicable military, aerospace, and commercial standards.

Each Perma-Coil Kit consists of:

- Aerospace quality free-running tanged inserts; in the most popular 1.5D nominal length.
- CoilThead STI Tap.
- All steel threaded installation tool.
- Complete and fool-proof instructions.

Perma-Coil Insert Packs

Made in the USA!

Perma-Coil® - Part Numbers

Thread Size	Perma-Coil Kits		Perma-Coil Packs		Drill
	Part No.	Inserts Per Kit	Part No.	Inserts Per Pack	
Unified Coarse					
4-40	1208-014	12	208-014	12	1/8
5-40	1208-015	12	208-015	12	9/64
6-32	1208-016	12	208-016	12	5/32
8-32	1208-018	12	208-018	12	11/64
10-24	1208-101	12	208-101	12	13/64
12-24	1208-102	12	208-102	12	15/64
1/4-20	1208-104	12	208-104	12	17/64
5/16-18	1208-105	12	208-105	12	21/64
3/8-16	1208-106	12	208-106	12	25/64
7/16-14	1208-107	6	208-107	6	29/64
1/2-13	1208-108	6	208-108	6	17/32
9/16-12	1208-109	6	208-109	6	19/32
5/8-11	1208-110	6	208-110	6	21/32
3/4-10	1208-112	4	208-112	4	25/32
7/8-9	3208-C14	6	108-114	1	29/32
1-8	3208-C16	6	108-116	1	1 1/32
11/8-7	3208-C18	5	108-118	1	1 11/64
11/4-7	3208-C20	4	108-120	1	1 19/64
13/8-6	3208-C22	4	108-122	1	1 27/64
11/2-6	3208-C24	4	108-124	1	1 35/64
Unified Fine					
10-32	1208-201	12	208-201	12	13/64
1/4-28	1208-204	12	208-204	12	17/64
5/16-24	1208-205	12	208-205	12	21/64
3/8-24	1208-206	12	208-206	12	25/64
7/16-20	1208-207	6	208-207	6	29/64
1/2-20	1208-208	6	208-208	6	33/64
9/16-18	1208-209	6	208-209	6	37/64
5/8-18	1208-210	6	208-210	6	41/64
3/4-16	1208-212	4	208-212	4	49/64
7/8-14	3208-F14	6	108-214	1	57/64
1-14	3208-F164	6	108-2164	1	1 1/64
1-12	3208-F16	6	108-216	1	1 1/64
11/8-12	3208-F18	5	108-218	1	1 5/32
11/4-12	3208-F20	4	108-220	1	1 9/32
13/8-12	3208-F22	4	208-222	1	1 13/32
11/2-12	3208-F24	4	108-224	1	1 17/32

Thread Size	Perma-Coil Kits		Perma-Coil Packs		Drill
	Part No.	Inserts Per Kit	Part No.	Inserts Per Pack	
Metric Coarse					
M3X0.5	1221-303	12	206-303	12	1/8
M4X0.7	1221-304	12	206-304	12	11/64
M5X0.8	1221-305	12	206-305	12	13/64
M6X1	1221-306	12	206-306	12	1/4
M7X1	1221-307	12	206-307	12	9/32
M8X1.25	1221-308	12	206-308	12	21/64
M9X1.25	1221-309	12	206-309	12	3/8
M10X1.5	1221-310	12	206-310	12	13/32
M11X1.5	1221-311	6	206-311	6	29/64
M12X1.75	3221-M12C	6	106-312	6	31/64
M14X2	3221-M14C	6	106-314	6	37/64
M16X2	3221-M16C	6	106-316	6	21/32
M18X2.5	3221-M18C	6	106-318	6	47/64
M20X2.5	3221-M20C	6	106-320	6	13/16
Metric Fine					
M8X1.0	1221-M8F	6	106-608	6	21/64
M10X1.0	1221-M1010	6	106-61010	6	13/32
M10X1.25	3221-M10F	12	106-610	12	13/32
M11X1.0	1221-M11F	6	106-611	6	7/16
M11X1.25	1221-M1125	6	106-61125	6	29/64
M12X1.25	3221-M12F	6	106-612	6	31/64
M12X1.5	3221-M1215	6	106-61215	6	31/64
M14X1.5	3221-M14F	6	106-614	6	9/16
M16X1.5	3221-M16F	6	106-616	6	21/32

Perma-Coil® Master Kits

Perma-Coil Master Thread Repair Kits are designed for professionals and mechanics. The Master Thread Repair Kits contain the most popular thread sizes used in automotive and light truck applications. By using Perma-Coil Thread Repair Kits, damaged threads can be brought back to the original thread size, and made better than new. Thread wear, corrosion and galling will be virtually eliminated, and the assembly will be even stronger than the original with Perma-Coil inserts.

Each Perma-Coil Master Thread Repair Kit consists of:

- 30 (6 of each size) Aerospace quality free-running tanged inserts; in the most popular 1.5 Dia. nominal length.
- 5 CoilThread STI Tap.
- 5 All steel threaded installation mandrel.
- 5 Molded Prewinder Sleeve for Unified Fine (1208-FMK).
- 3 Molded Prewinder Sleeve for Metric (1221-MMK).
- 2 Molded Prewinder Sleeve for Metric (1221-SMK).
- Step by Step instructions including drill sizes.

1208-CMK		1208-FMK		1221-MMK		1221-SMK	
Thread Size	Inserts Per Size	Thread Size	Inserts Per Size	Thread Size	Inserts Per Size	Thread Size	Inserts Per Size
Unified Coarse		Unified Fine		Metric		Metric	
1/4-20	6	1/4-28	6	M5X0.8	6	M5X0.8	6
5/16-18	6	5/16-24	6	M6X1.0	6	M6X1.0	6
3/8-16	6	3/8-24	6	M8X1.25	6	M8X1.25	6
7/16-14	6	7/16-20	6	M10X1.25	6	M10X1.5	6
1/2-13	6	1/2-20	6	M10X1.5	6	M12X1.75	6

KATO LockOne®

KATO's NEW LockOne is a revolutionary positive locking product designed to prevent a standard nut from loosening free under vibration. Upon tightening, the LockOne coils stretch, providing a superior locking force. Unlike nuts with nylon or locking compounds, the KATO LockOne does not degrade with each use. Due to the unique LockOne design, the assembly is FOD free. Save on assembly cost! No expensive replacement nuts! The LockOne lightweight design is perfect for use on weight sensitive applications.

LockOne prevents the nut from loosening free from the bolt!

Effective

LockOne fasteners underwent 30,000 cycle accelerated vibration testing in accordance with NAS3350 (National Aerospace Specification for impact type vibration test). In fact, even after 180,000 cycles the LockOne assembly remained intact!

LockOne can be easily substituted into existing designs. LockOne is reusable[1], does not degrade with each cycle. Made from 304 Stainless Steel WPB, LockOne is naturally corrosion resistant. KATO LockOne replaces items such as double nuts (jam nuts), cotter pins, safety-wire, nylon nuts, Loctite®, and more!

1. Contact KATO for reuse guideline.

Design and Assembly

Designing in LockOne couldn't be easier! Simply account for an extra three threads to the bolt length. That's it! It's compact nature allows for ease of use in designs with weight restrictions and maintenance schedules.

KATO's LockOne is fast and easy to install. No locking compounds to apply. A standard dodecagonal (12-Point) socket wrench installs the LockOne at the same time as the nut, minimizing installation time. LockOne may also be installed on existing applications, simply thread LockOne on the preinstalled nut. LockOne is adjustable and removable after installation with the same 12-point socket.

Installation is Easy!

Simply load the LockOne into the 12-Point socket.

Load the standard nut on top of the LockOne.

Tighten to application requirements.

If there is a gap between the LockOne and the nut, simply tighten the LockOne until it is flush with the nut.

LockOne Performance

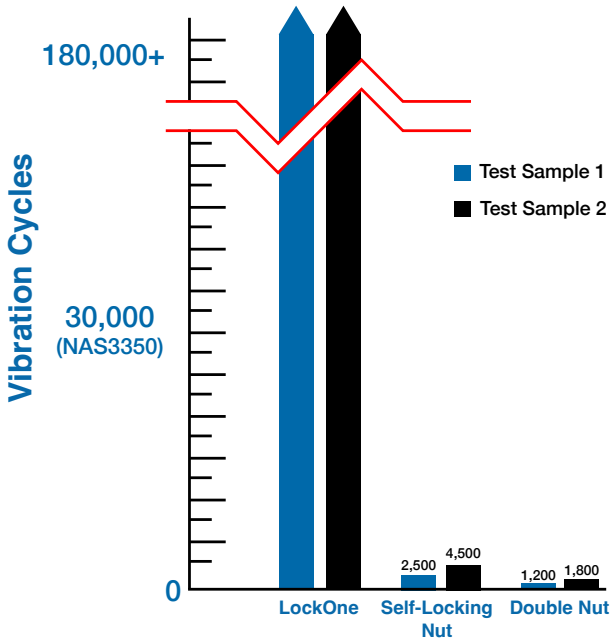

LockOne surpasses the testing requirements of NAS3350 (National Aerospace Specification for impact type vibration test)

Superior Force

Once positioned against the nut, LockOne engages the bolt along pitch diameter inducing spring forces axially and radially. These forces hold LockOne in place, preventing bolts and nuts from loosening free under vibration.

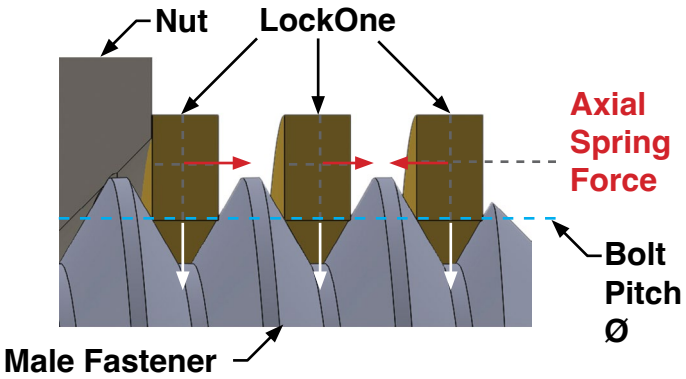

KATO LockOne Assortment Pack

KLOC-KIT

Thread Size	LockOne Per Size	12PT-Socket (Ref.)
Unified Coarse		
1/4-20	10	7/16
5/16-18	10	1/2
3/8-16	10	9/16
7/16-14	10	11/16
1/2-13	10	3/4
5/8-11	10	15/16
3/4-10	6	1-1/8
7/8-9	4	1-5/16
1-8	2	1-1/2

KLOF-KIT

Thread Size	LockOne Per Size	12PT-Socket (Ref.)
Unified Fine		
10-32	10	7/16
1/4-28	10	1/2
5/16-24	10	9/16
3/8-24	10	11/16
7/16-20	10	3/4
1/2-20	10	15/16
5/8-18	6	1-1/8
3/4-16	6	1-5/16
1-12	2	1-1/2

KLOM-KIT

Thread Size	LockOne Per Size	12PT-Socket (Ref.)
Metric Sizes		
M4X.7	10	7 mm
M5X.8	10	8 mm
M6X1	10	10 mm
M8X1.25	10	13 mm
M10X1.5	10	17 mm
M12X1.75	10	19 mm
M16X2	6	24 mm
M20X2.5	4	30 mm
M22X2.5	4	32 mm
M24X3	2	36 mm

KATO LockOne® - Part Numbers

KLO C - 8 _

Product Code:
- **KLO** - KATO LockOne

Thread Designation:
- **C** - Coarse
- **F** - Fine
- **M** - Metric

Product:
- **P** - LockOne Pack

Size Designation:
- **Chart Below**
- **KIT -** LockOne Kit

Specifications

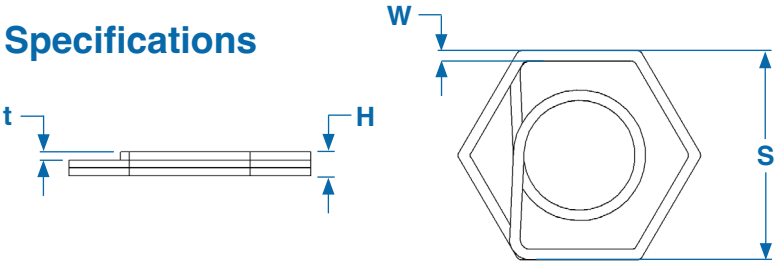

Thread Size	KATO LockOne	Technical Data				Weight
		S	H	W	t	
Unified Coarse						
1/4-20	KLOC-4	0.43	0.11	0.03	0.03	0.80 g
5/16-18	KLOC-5	0.50	0.11	0.03	0.03	0.80 g
3/8-16	KLOC-6	0.55	0.13	0.04	0.03	1.30 g
7/16-14	KLOC-7	0.65	0.14	0.05	0.03	2.31 g
1/2-13	KLOC-8	0.75	0.16	0.05	0.04	3.00 g
5/8-11	KLOC-10	0.93	0.18	0.06	0.04	4.80 g
3/4-10	KLOC-12	1.12	0.22	0.07	0.05	9.40 g
7/8-9	KLOC-14	1.30	0.22	0.07	0.05	10.10 g
1-8	KLOC-16	1.49	0.28	0.08	0.06	16.25 g
Unified Fine						
10-32	KLOF-3	0.37	0.17	0.04	0.03	---
1/4-28	KLOF-4	0.44	0.17	0.04	0.03	---
5/16-24	KLOF-5	0.50	0.19	0.04	0.03	0.45 g
3/8-24	KLOF-6	0.56	0.19	0.04	0.03	1.13 g
7/16-20	KLOF-7	0.69	0.23	0.05	0.04	---
1/2-20	KLOF-8	0.75	0.23	0.05	0.04	2.02 g
9/16-18[1]	KLOF-9	0.87	0.26	0.06	0.04	---
5/8-18	KLOF-10	0.94	0.26	0.06	0.04	---
3/4-16	KLOF-12	1.12	0.32	0.07	0.05	---
7/8-14[1]	KLOF-14	1.31	0.33	0.07	0.05	---
1-12	KLOF-16	1.50	0.38	0.08	0.06	9.11 g
Metric Sizes						
M4X.7	KLOM-4	7	1.4	.50	.35	0.24 g
M5X.8	KLOM-5	8	1.6	.60	.40	0.24 g
M6X1	KLOM-6	10	2.0	.70	.50	0.45 g
M8X1.25	KLOM-8	13	2.5	.88	.63	0.95 g
M10X1.5	KLOM-10	17	3.0	1.05	.75	1.79 g
M12X1.75	KLOM-12	19	3.5	1.23	.88	2.83 g
M16X2	KLOM-16	24	4.0	1.40	1.00	4.78 g
M20X2.5	KLOM-20	30	5.0	1.75	1.25	9.39 g
M22X2.5	KLOM-22	32	5.0	1.75	1.25	10.12 g
M24X3	KLOM-24	36	6.0	2.10	1.50	16.21 g

Thread Size	LockOne Pack		12PT-Socket (Ref.)
	Part No.	LockOne Per Pack	
Unified Coarse			
1/4-20	KLOC-4P	10	7/16
5/16-18	KLOC-5P	10	1/2
3/8-16	KLOC-6P	10	9/16
7/16-14	KLOC-7P	10	11/16
1/2-13	KLOC-8P	10	3/4
5/8-11	KLOC-10P	6	15/16
3/4-10	KLOC-12P	2	1-1/8
7/8-9	KLOC-14P	2	1-5/16
1-8	KLOC-16P	2	1-1/2
Unified Fine			
10-32	KLOF-3P	10	3/8
1/4-28	KLOF-4P	10	7/16
5/16-24	KLOF-5P	10	1/2
3/8-24	KLOF-6P	10	9/16
7/16-20	KLOF-7P	10	11/16
1/2-20	KLOF-8P	10	3/4
9/16-18[1]	KLOF-9P	6	7/8
5/8-18	KLOF-10P	6	15/16
3/4-16	KLOF-12P	2	1-1/8
7/8-14[1]	KLOF-14P	2	1-5/16
1-12	KLOF-16P	2	1-1/2
Metric Sizes			
M4X.7	KLOM-4P	10	7 mm
M5X.8	KLOM-5P	10	8 mm
M6X1	KLOM-6P	10	10 mm
M8X1.25	KLOM-8P	10	13 mm
M10X1.5	KLOM-10P	10	17 mm
M12X1.75	KLOM-12P	10	19 mm
M16X2	KLOM-16P	6	24 mm
M20X2.5	KLOM-20P	2	30 mm
M22X2.5	KLOM-22P	2	32 mm
M24X3	KLOM-24P	2	36 mm

1. Contact KATO

KATOpedia™

KATOpedia is the most comprehensive online encyclopedia on helical coil screw thread inserts. The KATO website has always contained more information on helical coil screw thread inserts than any other website in existence!

KATOpedia not only replaces the Tech-Data section from our previous website but improves on it by providing even more information like technical data sheets, drawings, instructions, compliance statements, and so much more! Try out KATOpedia and let us know what you think.

Tool Instructions

Now you can view, read, and/or print any of our tooling instructions from our website. Stay up to date on all the latest information and procedures for installing Tangless or tanged inserts, setting and using installation tools, and learning important tips for tool maintenance and care!

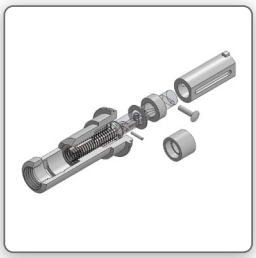

Tool Instructions

Video Workshop

One of the most frequently visited pages on the KATO website is the Video Workshop. The KATO instructional videos have already helped thousands of customers learn how to setup and use their KATO tools, but we've made them even better. The Video Workshop contains instructional videos on the latest KATO tools. All of the videos were shot in 1080p for exceptional clarity. The videos are short, easy to follow, and excellent for training purposes!

Video Workshop

And Much More!

Product Wizard

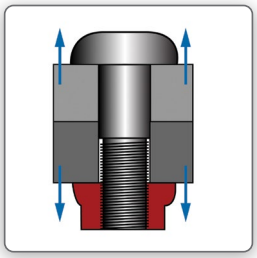

Tensile Strength Wizard

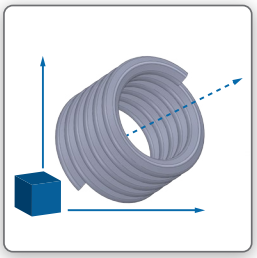

3D-Models

Compliance Statement

Certifications

Insert Selection

Technical Articles

SAVE TIME. SAVE MONEY. MADE IN THE USA!

KATO® PRO-KITS®

NOW AVAILABLE IN SCREW-LOCKING!

KATO FASTENING SYSTEMS, INC.
130 RESEARCH DR. SUITE 100
HAMPTON, VA 23666
PHONE: 757-873-8980
FAX: 757-873-4920
WEB: WWW.KATOFASTENING.COM

KATO AUTHORIZED DISTRIBUTOR